CIRCLE K SOUTHWEST PROTOTYPE 4480 – 08/13/2013

Electrical Requirements

- Prepare sites according to NFPA 30A, NFPA 70, and applicable national, state and local codes/regulations.
- Use licensed electricians to make all electrical connections.
- Use a dedicated circuit/phase system. Wire all electronic units to the same power leg.
- Use an earth ground for circuits.
- Mount all circuit breaker panels and relay boxes securely to the wall.
- Use UL recognized/approved components and/or systems.
- Recommended voltages for pumping units are 220VAC- single phase or 380VAC- 3 phase.
- Route product wiring to protect from damage, using conduit as required.

Note: Pumping units operating at higher load levels than dispensers. See FE-363 and FE-364 for details.

Emergency Power Cutoff Switch

⚠ WARNING

Spills and collisions expose highly flammable and explosive fuels.

Failure to install and use an Emergency Power Cutoff could result in severe injury or death.

Observe all safety precautions in this and other manuals.

- NFPA 30A and Gilbarco require that you install one or more emergency power cutoff switches.
- An emergency power cutoff switch is a single control that removes AC power to all island equipment (pumps/dispensers, STPs, canopies, lights, and so on.).
- Make the emergency power cutoff switch accessible, label it clearly and install it away from any hazard that may occur at the pumps/dispensers. Do not install cutoff switches more than 100-feet away from the pumps/dispensers.
- Show all employees where the emergency power cutoff switch is located and how to use it. Remind them often.

  Note: Do not use E-STOP, ALL-STOP, or PUMP STOP keys on Gilbarco console/cash registers to shut off pump/dispenser power. These keys do not remove AC power and do not always stop product flow.

Circuit Breakers

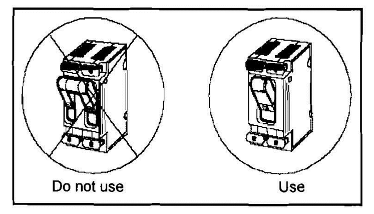

- Install a dedicated UL/CUL listed switched-neutral breaker (except for Canada) to each circuit leading to a pump/dispenser or dispenser and STPs. It must be able to disconnect hot and neutral conductors simultaneously. Single-pole breakers with handle ties shall not be permitted. Ref. NEC 514
- Use only UL/CUL listed circuit breaker panel as appropriate for that area.
- Install circuit breakers away from the pumps/dispensers. They must be readily accessible and clearly marked.
- Install a separate circuit breaker for each STP (dispenser models) or each pump motor (self-contained models).
- Install one circuit breaker for each pump/dispenser or small island group to allow powering down of pump/dispenser for service.

STP Control Relay Boxes for Dispensers

- Install a separate control relay for each STP.
- Do not use the dispenser relay to power the STP.
- Combined STP Control Relay/Isolation Relay boxes are recommended.

STP Isolation Relays for Electronic Dispensers

STP isolation relays provide electrical isolation between dispensers and prevent damage from cross phasing. Refer to MDE-2755 Gilbarco STP Control and Dispenser Isolation Relay Box, PA0287 Installation and FE-321 Gilbarco STP Isolation Relay Box PA0287 Field Wiring Diagram.

Note: For 3 phase STP, use isolation relay at the input of the 3 phase STP control box.

- Gilbarco requires installation of STP isolation relays in addition to STP control relays.
- Use isolation relays for each STP control line at each dispenser or dispenser grouping on a single circuit breaker.
- Route neutral wire to the control relays from the dispenser circuit breaker (see field wiring diagrams).
- Combined STP Control Relay/Isolation Relay boxes are recommended.

Conduit

Gilbarco recommends that a spare conduit be run for future high speed communications. See High Speed Communication Wiring on page 13 for details.

- Use 1-inch trade size rigid aluminum conduit with the Encore and Eclipse pumps/dispensers to connect wires to the pump/dispenser. InfoScreen® and two-wire data wires can share power wiring conduit (See model-specific wiring diagrams).
- Use separate 1-inch conduit for CRIND® Twisted Pair, intercom and call button wiring.
- Use threaded, rigid metal conduit or a rigid non-metallic conduit for applications below the pump dispenser to carry electrical wires. Conduit must conform to national and local electrical codes. If you use nonmetallic conduit, it must be at least 2-feet underground. The last 2-feet of the underground run to the junction box must be rigid metal conduit or threaded steel intermediate metal conduit. Tighten all threaded conduits.
- Use of galvanized pipe is acceptable as an alternative to black iron pipe, when black iron pipe is specified.
- Never share conduit with other manufacturers' equipment (for example, speaker wires, canopy lights).

  Note: You can use the same conduit for routing power to the pump/dispenser and the two-wire data loop (Class 1 circuit). The two-wire data loop is a Class 1 circuit.
- Never rely on metal conduit to provide an equipment ground. Run a separate ground wire. Separate and isolate dispenser/pump wiring from other equipment wiring in wiring troughs.
- Never use knock-out boxes or flexible conduit for installation.

  Note: Extra junction boxes added to the pump/dispenser must be listed Class 1, Div. 1, Group C and D explosion-proof.
- Use electrical fittings that are listed for Class 1, Group C and D hazardous locations as required by NFPA 30A and NFPA 70.
- A seal-off 'Y' fitting (example: Killark® Type EY) must be installed on all units as a first connection where conduit leaves the ground.

Wiring

For high speed communications information, go to High Speed Communication Wiring on page 13.

- Wire all pumps/dispensers according to NFPA 30A, NFPA 70 and applicable national, state, and local codes/ regulations.
- Wire all circuits N.E.C. Class 1 except speaker (intercom) circuit which must be N.E.C. Class 2. Install speaker (intercom) circuit in separate 1-inch conduit.
- Use stranded gas and oil resistant copper wire rated for 300 volts (up to 240VAC source) and 80°C.
- In the main conduit, for two-wire communications use only twisted-pair wiring per the diagram. Do not use shielded twisted pair.
- Unshielded twisted pair wire is required for two wire communication wiring for new installations. Previously wired stations may continue to use tested existing non-twisted pair wiring, that has been short and continuity tested and passed. Twisted pair is recommended for existing wired stations for all geographic regions experiencing higher than national average lightening strikes.
- Leave 6 to 8-feet of wire out of conduit for connection to dispenser.
- Place dispensers on the same phase.

  Note: If Gilbarco isolation relay box is installed, dispensers are not required to be on the same phase. (Also note that Red Jacket also has an isolation relay box that can be used.)

- Use listed wire nuts for all connections. Do not use tape.
- Pull spare wires for future use.
- Protect conduit ends and wire from water or damage.
- Seal-off 'Y' fitting(s) must be potted after all wires are run to termination points.

For additional wiring notes and requirements consult the following documents:

- FE-341 Field Wiring Diagrams - The Eclipse Series Dispensers 120/240 VAC
- FE-363 Field Wiring Diagrams - Encore 500/550 Series Units
- FE-364 Field Wiring Diagrams - Encore 300 Units

Data Wire Lengths

Use the following table to determine maximum data wire lengths.

For This Distribution Box	The Distance Between the Distribution Box and Dispenser	The Distance Between the Distribution Box and Console/Controller
PA0133, PA0187 G-SITE®	"Total" data wire system run no more than 2600 ft. with 14 AWG.	
PA0242 Transac® System 1000™	No more than 2600 ft. with 14AWG.	No more than 2600 ft. with 14AWG.
PA0261 Universal D-Box	No more than 2600 ft. with 14AWG.	No more than 2600 ft. with 14AWG.
PA0306 Distribution Box	No more than 2600 ft. with 14AWG.	No more than 2600 ft. with 14AWG.

Note: When installing new 2-Wire Communication wiring, use unshielded twisted pair data wires. Shielded wire must not be used. Wiring spec: 2-wire twisted pair (UTP) with 10 to 12 twists per foot, stranded annealed copper tinned with 18 AWG minimum required for runs up to 1000 feet or 14 AWG minimum for runs up to 2600 feet. Do not daisy chain communications wiring. Insulation spec: PVC insulation of type TFFN or MTW, UL approved gasoline and oil resistant. Reference C&M Corporation Part #27525 (18 AWG) or equivalent. Gilbarco part number for wire is: Q13221-2.

N.T.S.

1 / FS4.1 ENCORE–ECLIPSE INSTALLATION INFORMATION

FOR BID ONLY

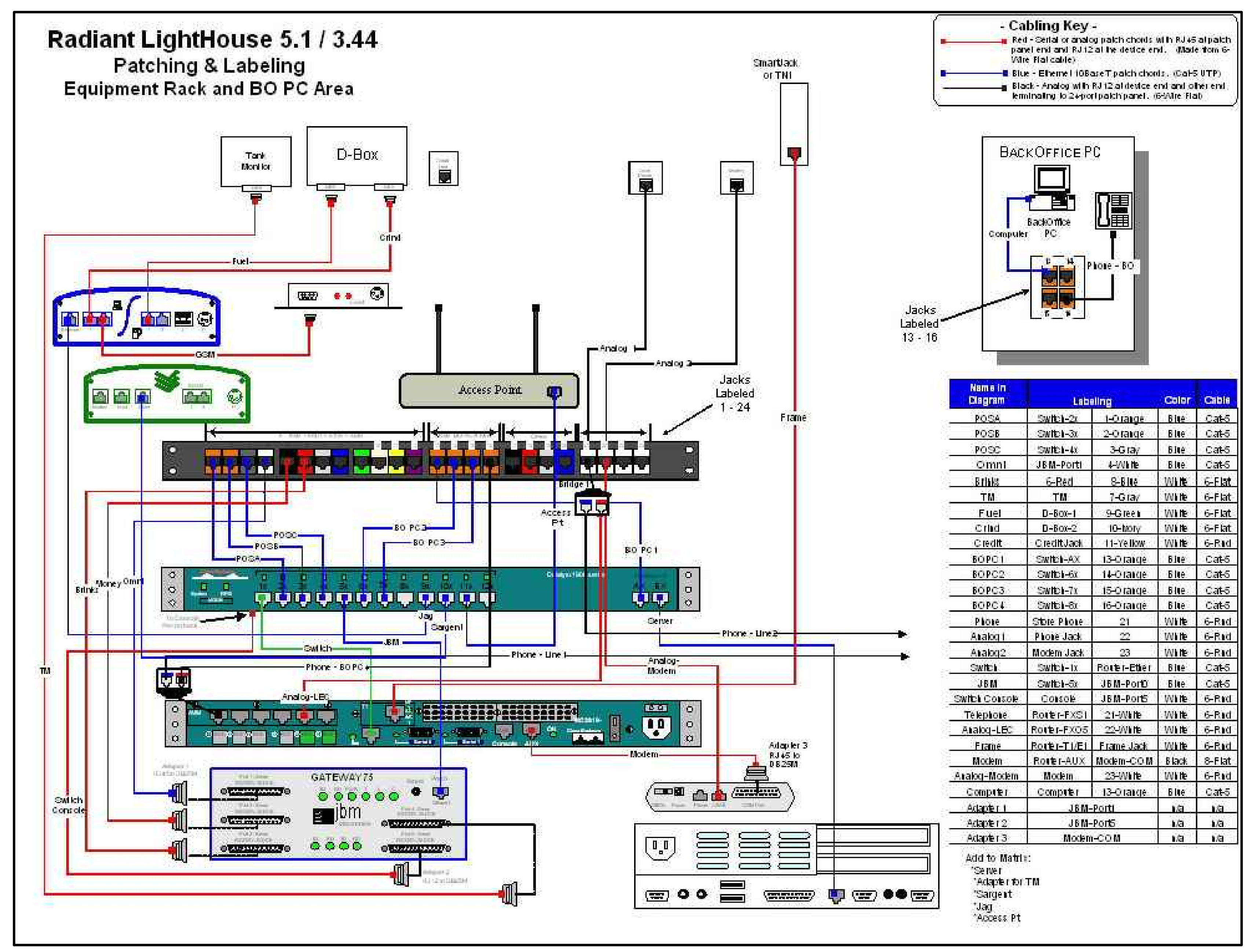

Name in Diagram	Labeling		Color	Cable
POSA	Switch-2x	1-Orange	Blue	Cat-5
POSB	Switch-3x	2-Orange	Blue	Cat-5
POSC	Switch-4x	3-Gray	Blue	Cat-5
Omni	JBM-Port1	4-White	Blue	Cat-5
Brinks	6-Red	8-Blue	White	6-Flat
TM	TM	7-Gray	White	6-Flat
Fuel	D-Box-1	9-Green	White	6-Flat
Crind	D-Box-2	10-Ivory	White	6-Flat
Credit	CreditJack	11-Yellow	White	6-Rnd
BOPC1	Switch-AX	13-Orange	Blue	Cat-5
BOPC2	Switch-6x	14-Orange	Blue	Cat-5
BOPC3	Switch-7x	15-Orange	Blue	Cat-5
BOPC4	Switch-8x	16-Orange	Blue	Cat-5
Phone	Store Phone	21	White	6-Rnd
Analog1	Phone Jack	22	White	6-Rnd
Analog2	Modem Jack	23	White	6-Rnd
Switch	Switch-1x	Router-Ether	Blue	Cat-5
JBM	Switch-5x	JBM-Port0	Blue	Cat-5
Switch Console	Console	JBM-Port5	White	6-Rnd
Telephone	Router-FXS1	21-White	White	6-Rnd
Analog-LEC	Router-FXO5	22-White	White	6-Rnd
Frame	Router-T1/E1	Frame Jack	White	6-Rnd
Modem	Router-AUX	Modem-COM	Black	8-Flat
Analog-Modem	Modem	23-White	White	6-Rnd
Computer	Computer	13-Orange	Blue	Cat-5
Adapter1	JBM-Port1		n/a	n/a
Adapter2	JBM-Port5		n/a	n/a
Adapter3	Modem-COM		n/a	n/a

Add to Matrix:
*Server
*Adapter for TM
*Sargent
*Jag
*Access Pt

N.T.S.

2 / FS4.1 FRAME RELAY RACK ELEVATIONS

GreenbergFarrow

COPYRIGHT NOTICE
This drawing is the property of the above referenced Professional and is not to be used for any purpose other than the specific project and site named herein, and cannot be reproduced in any manner without the express written permission from the Professional

ISSUE/REVISION RECORD

DATE	DESCRIPTION
01/19/15	PERMIT SET

PROFESSIONAL SEAL

PROFESSIONAL IN CHARGE
ERIC WOLF

PROJECT MANAGER
ERIC WOLF

QUALITY CONTROL
ERIC WOLF

DRAWN BY
ERIC WOLF

PROJECT NAME

CIRCLE K STORES, INC.

COLORADO SPRINGS COLORADO

E. FOUNTAIN BLVD & ACADEMY PARK LOOP

CIRCLE K STORES INC.

PROJECT NUMBER
20130780

SHEET TITLE

FUEL SYSTEM DIAGRAMS

SHEET NUMBER

F8.0

Drawing Name: P:\2013\20130780\500 Construction Documents – Fuel Plans\Fuel–Gas Plans –Fountain and Academy\20130780–F8.0.dwg Last Modified: Dec 30, 2014 – 10:12am Plotted on: Jan 20, 2015 – 1:58pm by ewolf