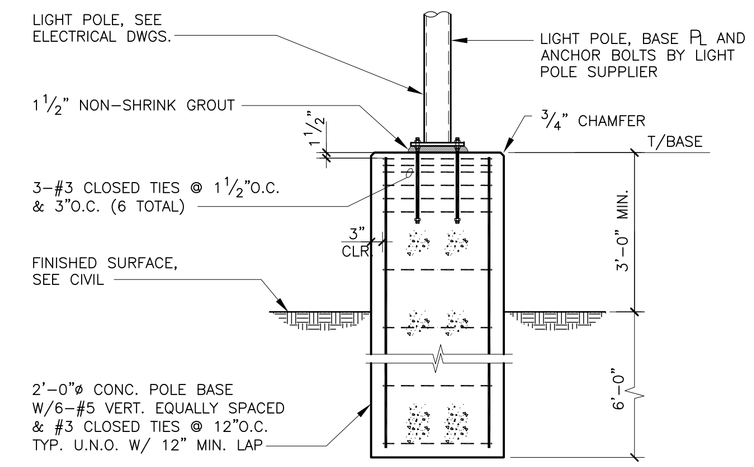

NOTES:
1. MAXIMUM HEIGHT OF LIGHT POLE 22'-0", ABOVE BASE.
2. SEE ELEC. AND CIVIL DWGS. FOR ADDITIONAL INFORMATION.

212549_D06D

12 — 9 — **LIGHT POLE FOOTING** — SCALE 1/2"=1'-0" — 6

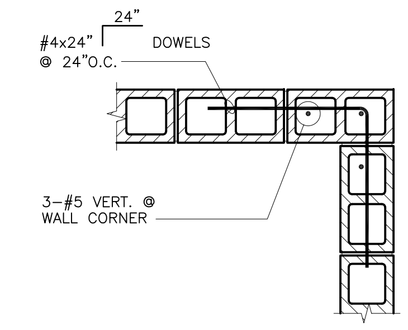

NOTES:
1. INTERLOCK ALL CORNERS AND INTERSECTIONS; NO TOOTHING ALLOWED
2. TYPICAL REINF. NOT SHOWN FOR CLARITY.

TYP. CMU WALL REINF. AT CORNER — SCALE 3/4"=1'-0" — 3

1. CONCRETE MASONRY UNITS (HOLLOW UNITS) SHALL BE GRADE "N", MEDIUM WEIGHT, (MAXIMUM DENSITY 115 PCF) CONFORMING TO ASTM C90 AND CBC STANDARD, MINIMUM ULTIMATE STRENGTH OF BLOCK SHALL BE 1900 PSI. SEE ARCHITECTURAL FOR TYPE, PATTERN AND JOINT DETAILS. ALL UNITS BELOW ROUGH GRADE OR IN CONTACT WITH SOIL SHALL BE NORMAL WEIGHT.
2. GROUT SHALL BE COARSE GROUT (PEA GRAVEL) WITH COMPRESSIVE STRENGTH OF 2000 PSI AT 28 DAYS MAXIMUM DENSITY SHALL BE 140 PCF. GROUT WITHIN 1 1/2 HOURS FROM INTRODUCING WATER INTO THE MIXTURE. ANY ADMIXTURES CONTAINING CHLORIDES SHALL NOT BE USED IN MORTAR OR IN GROUT
3. MORTAR SHALL BE 1800 PSI IN 28 DAYS.TYPE "S" AS DEFINED IN TABLE 21A-A OF THE 2013 CALIFORNIA BUILDING CODE AND CONFORMING TO ASTM C270
4. MINIMUM SPECIFIED STRENGTH OF THE MASONRY ASSEMBLAGE "f'm" SHALL BE 1500 PSI.
5. UNLESS NOTED, LAY MASONRY IN RUNNING BOND. USE CLOSED END UNITS AT CORNERS.
6. GROUTING PROCEDURE FOR LIFTS EXCEEDING FOUR FEET: PROVIDE CLEAN OUT OPENINGS AT THE BOTTOM OF THE LIFT IN EVERY CELL TO BE FILLED. LIFT NOT TO EXCEED 6'-0". CONFORM TO HIGH LIFT GROUTING PROCEDURES PER CODE.
7. ALL CELLS SHALL BE GROUTED SOLID. HOLD TOP OF EACH GROUT 2" DOWN BELOW TOP OF BLOCK.
8. CONTINUOUS INSPECTION OF WORK INVOLVING MASONRY IS REQUIRED, UNLESS NOTED OTHERWISE.
9. PROVIDE OPEN END BLOCKS FOR CONTINUOUS VERTICAL BARS.
10. CONTRACTOR SHALL ADEQUATELY BRACE ALL MASONRY WALLS DURING ERECTION AND NOT REMOVE THESE MEANS UNTIL DESIGN LATERAL SUPPORT IS ADEQUATELY IN PLACE
11. PROVIDE 2-#5 VERTICAL BARS AND ALL ENDS, CORNERS, JAMBS AND INTERSECTIONS OF ALL MASONRY WALLS UNLESS NOTED OTHERWISE HORIZONTAL BEAMS, BOND BEAMS AND REINFORCING SHALL BE DISCONTINUOUS AT CONTROL JOINTS
12. PROVIDE MASONRY PRISM TESTING IN ACCORDANCE WITH CBC STANDARDS.
13. CONCRETE MASONRY UNITS SHALL NOT BE WETTED UNLESS SPECIFICALLY APPROVED.
14. UNLESS NOTED. VERTICAL AND HORIZONTAL REINFORCING. TIES AND EMBEDDED ITEMS SHALL BE IN PLACE PRIOR TO GROUTING. UNLESS NOTED, VERTICAL AND HORIZONTAL REINFORCING LAP SPLICE SHALL BE 48 BAR DIAMETERS, BUT NOT LESS THAN 12" USE POSITIONERS TO HOLD VERTICAL REINFORCING IN PLACE. SPACING OF POSITIONERS SHALL NOT EXCEED 200 BAR DIAMETERS NOR 10 FEET LOCATE 8" MAX. ABOVE TOP OF GROUT LEFT, TYPICALLY

11 — 8 — **MASONRY NOTES** — SCALE NONE — 5

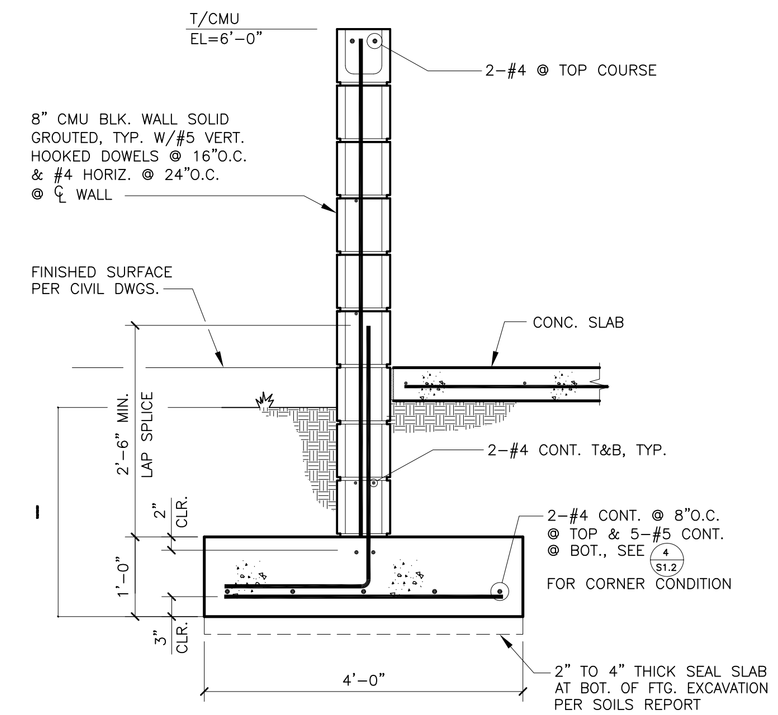

212549_D27C

TRASH ENCLOSURE WALL/FOOTING — SCALE 3/4"=1'-0" — 2

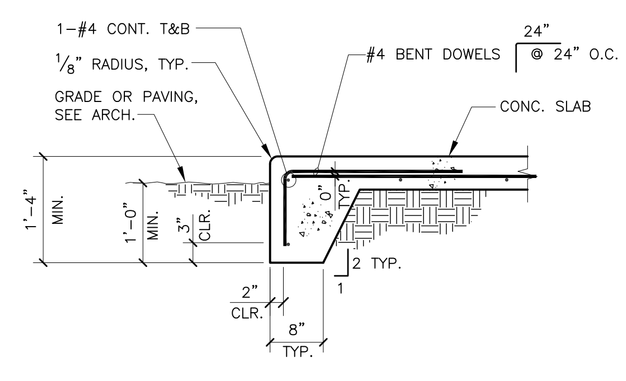

NOTE:
1. EXTEND A MINIMUM OF 4" INTO SUBGRADE BELOW THE BOTTOM OF AGGREGATE BASE SECTION AND/OR NON-EXPANSIVE ENGINEERED FILL.

28562_D43C

10 — 7 — **EDGE OF SLAB** — SCALE 3/4"=1'-0" — 4

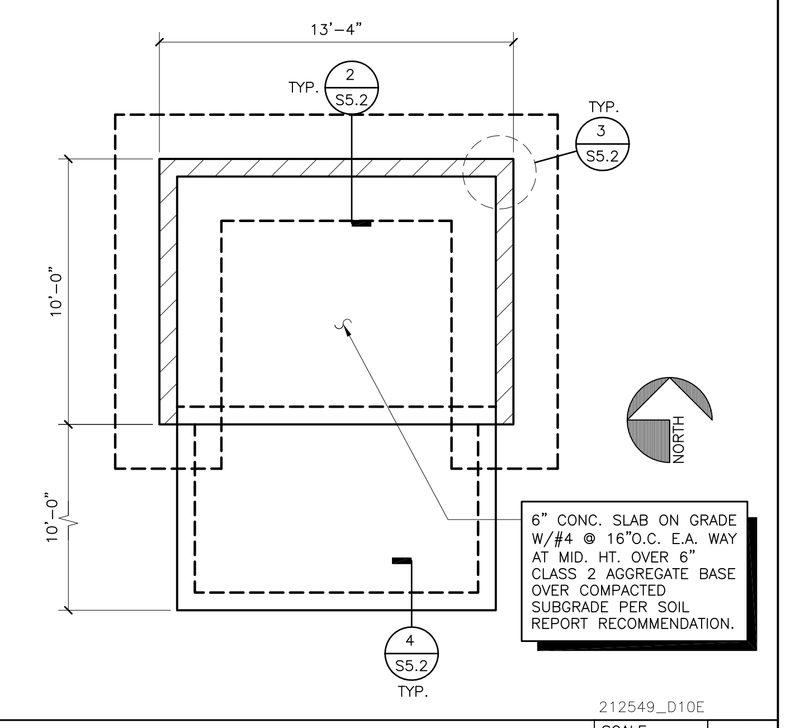

212549_D10E

TRASH ENCLOSURE PLAN — SCALE 1/4"=1'-0" — 1

GreenbergFarrow
19000 MacArthur Blvd., Suite 250
Irvine, CA 92612
t: 949 296 0450 f: 949 296 0437

COPYRIGHT NOTICE
This drawing is the property of the above referenced Professional and is not to be used for any purpose other than the specific project and site named herein, and cannot be reproduced in any manner without the express written permission from the Professional

ISSUE/REVISION RECORD

DATE	DESCRIPTION
2/28/2014	PERMIT/BID SET

KSP CONSULTING ENGINEERS
25241 Commercentre Dr.
Suite 100
Lake Forest, CA 92630
T: 949.380.3970
F: 949.380.3977
email: info@kspeng.com

This drawing and the design shown are the property of KSP Consulting Engineers, Inc. The production, copying or other use of this drawing without their written consent is prohibited and any infringement will be subject to legal action.

PROFESSIONAL SEAL

PROFESSIONAL IN CHARGE KS
PROJECT MANAGER LL
QUALITY CONTROL MK
DRAWN BY DC

PROJECT NAME
CIRCLE K STORES, INC.

PFLUGERVILLE
TEXAS

SEC WEST PECAN ST. & SARAH'S CREEK DR. PFLUGERVILLE, TX

CIRCLE K STORES INC.

PROJECT NUMBER KSP - 140301

SHEET TITLE
PLANS SECTIONS & DETAILS

SHEET NUMBER
S5.2

February 28,2014 - 11:07 am ; User: nh ; K:\Greenberg Farrow\Circle K\Circle K - Pflugerville, TX\140301_S5.2.dwg