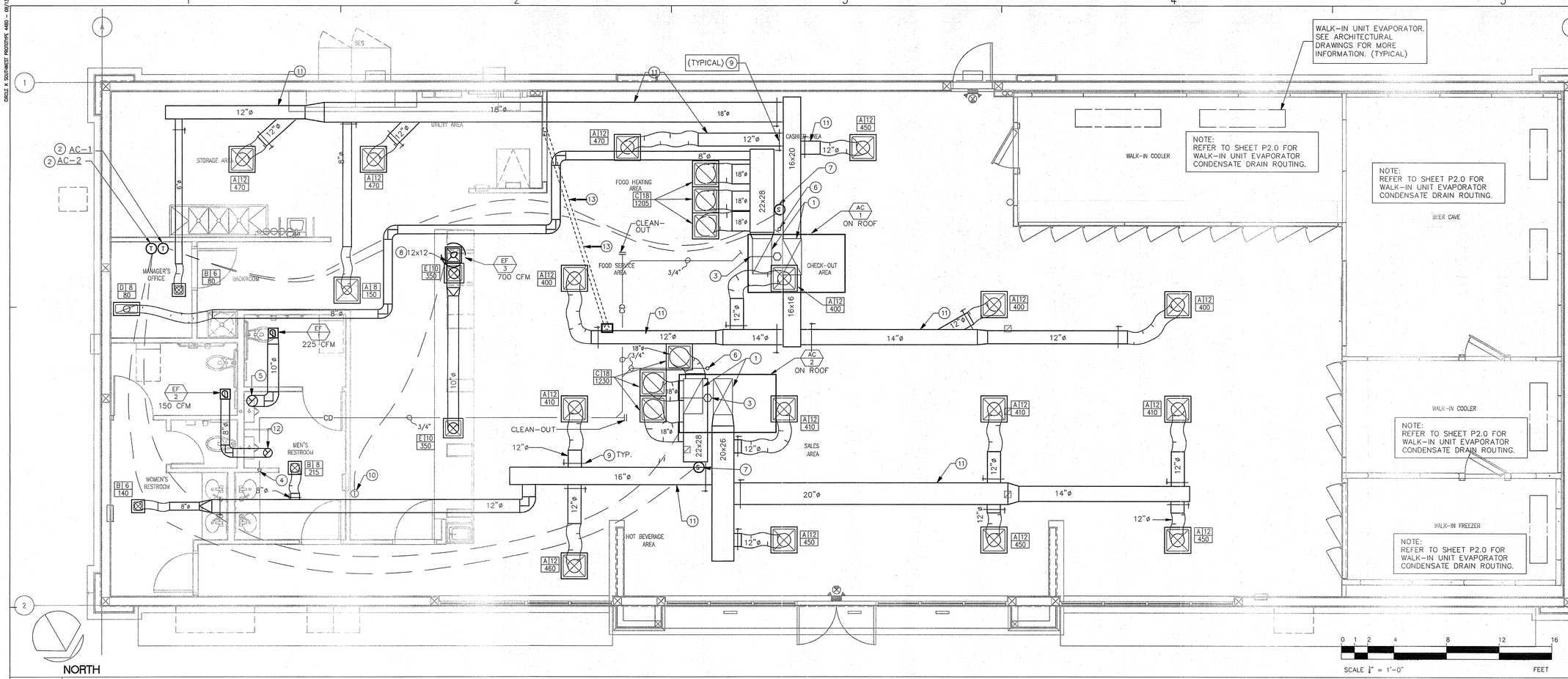

M1 MECHANICAL FLOOR PLAN

1/4"=1'-0"

GENERAL NOTES

1. ALL DIFFUSERS ARE 4-WAY UNLESS OTHERWISE SPECIFIED.

KEYED NOTES

1. FULL SIZE SUPPLY AND RETURN AIR DUCTS DOWN THROUGH ROOF FROM AC UNIT.
2. PROGRAMMABLE THERMOSTAT WITH REMOTE TEMPERATURE SENSOR.
3. DUCT SMOKE DETECTOR TO SHUT DOWN UNIT UPON DETECTION.
4. 3/4" CONDENSATE DRAIN LINE DOWN IN WALL TO LAVATORY TAILIPIECE.
5. 10"ø TOILET EXHAUST AIR DUCT UP THROUGH ROOF TO CAP. LOCATE CAP 10'-0" AWAY FROM ANY FRESH AIR INTAKES.
6. 3/4" CONDENSATE DRAIN LINE DOWN THROUGH ROOF TO CEILING SPACE.
7. REMOTE TEMPERATURE SENSOR IN RETURN AIR DUCT.
8. 12"x12" EXHAUST AIR DUCT UP THROUGH ROOF TO EF-3.
9. MANUAL BALANCING DAMPER. BALANCE TO CFM NOTED.
10. T-STAT. SET TO 85° F. INTERLOCK WITH EF-3.
11. ROUTE ALL DUCTWORK WITHIN THE TRUSSES UNLESS OTHERWISE SPECIFIED (TYPICAL).
12. 8"ø TOILET EXHAUST AIR DUCT UP THROUGH ROOF TO CAP. LOCATE CAP 10'-0" AWAY FROM ANY FRESH AIR INTAKES.
13. MECHANICAL CONTRACTOR SHALL INSTALL A 4" DIAMETER PVC PIPE, SCHEDULE 40, FROM TOP OF SLAB, DOWN BELOW SLAB, OVER TO DELI CASE AND TERMINATE AT SLAB WITH PULL STRING AS SHOWN. THE REFRIGERANT PIPING WILL BE INSTALLED IN THIS PIPE SLEEVE. CONTRACTOR SHALL PROVIDE LONG RADIUS TYPE SWEEP ELBOWS AS REQUIRED. MECHANICAL CONTRACTOR SHALL COORDINATE WITH GENERAL CONTRACTOR THE TIMING OF THIS INSTALLATION. PIPING SHALL BE CAPPED AT OPEN ENDS AS SOON AS IT IS INSTALLED TO PREVENT DIRT, DEBRIS, AND WATER FROM COLLECTING INSIDE OF PIPE. COORDINATE TERMINATION POINT AT SLAB WITH DELI CASE INSTALLATION INSTRUCTIONS. MECHANICAL CONTRACTOR SHALL COORDINATE ELEVATION OF PIPE BELOW SLAB WITH PLUMBING UTILITIES.

GreenbergFarrow

COPYRIGHT NOTICE
This drawing is the property of the above referenced Professional and is not to be used for any purpose other than the specific project and site named herein, and cannot be reproduced in any manner without the express written permission from the Professional.

ISSUE/REVISION RECORD

DATE	DESCRIPTION
02/28/2014	BID/PERMIT SET

PROFESSIONAL SEAL

STATE OF TEXAS
JAMES NICHOLAS LEDYARD
108394
LICENSED
PROFESSIONAL ENGINEER
FEB 28 2014

COA#-F-4380

PROFESSIONAL IN CHARGE
JAMES LEDYARD
PROJECT MANAGER
DARCY HASBERRY
QUALITY CONTROL
JAMES LEDYARD
DRAWN BY
DARCY HASBERRY

PROJECT NAME
CIRCLE K STORES, INC.

PFLUGERVILLE TEXAS

SEC WEST PECAN ST. & SARAH'S CREEK DR. PFLUGERVILLE, TX

CIRCLE K STORES INC.

PROJECT NUMBER
20140041.5

SHEET TITLE
MECHANICAL FLOOR PLAN

SHEET NUMBER
M2.0