CIRCLE K SOUTHWEST PROTOTYPE 4480 – 08/13/2013

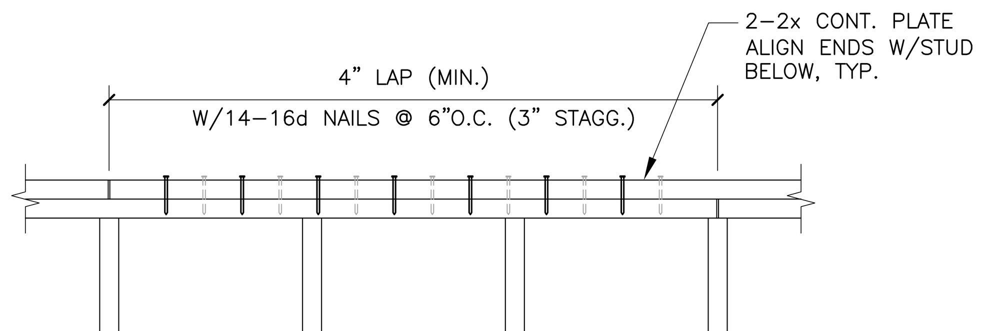

212518_D36B

2-2x TOP PLATE SPLICE
SCALE 1"=1'–0" | 13

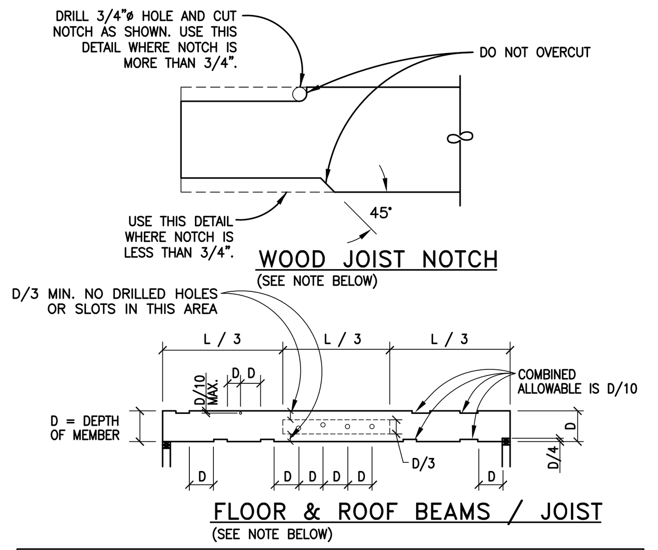

NOTE:
1. HOLES & NOTCHES ARE NOT ALLOWED IN BEAMS IN COMMERCIAL CONSTRUCTION W/O WRITTEN APPROVAL FROM THE ENGINEER OF RECORD. THEY ARE OK AS NOTED IN RESIDENTIAL CONSTRUCTION.
2. VALUES ARE HALF OF THOSE SHOWN ABOVE @ GLULAMS OR OTHER MANUFACTURED BEAMS.
3. THESE VALUES DO NOT APPLY TO MANUFACTURED TRUSSES OR JOIST. DO NOT NOTCH OR DRILL HOLES IN MANUFACTURED TRUSSES OR JOIST WITH OUT THE WRITTEN APPROVAL OF THE ENGINEER OF RECORD & THE MANUFACTURE.
4. NO HOLES OR NOTCHES MAY BE MADE IN JOIST IN BUILDINGS SUPPORTING SNOW LOADS, UNLESS THE JOIST IS DOUBLED & STITCH NAILED TOGETHER.

NOM.	ACTUAL W/	D/6	D/4	D/3
4"	3–1/2"	9/16"	7/8"	1–1/8"
6"	5–1/2"	7/8"	1–3/8"	1–13/16"
8"	7–1/4"	1–3/16"	1–13/16"	2–3/8"
10"	9–1/4"	1–1/2"	2–5/16"	3–1/16"
12"	11–1/4"	1–7/8"	2–13/16"	3–3/4"
14"	13–1/4"	2–3/16"	3–5/16"	4–3/8"

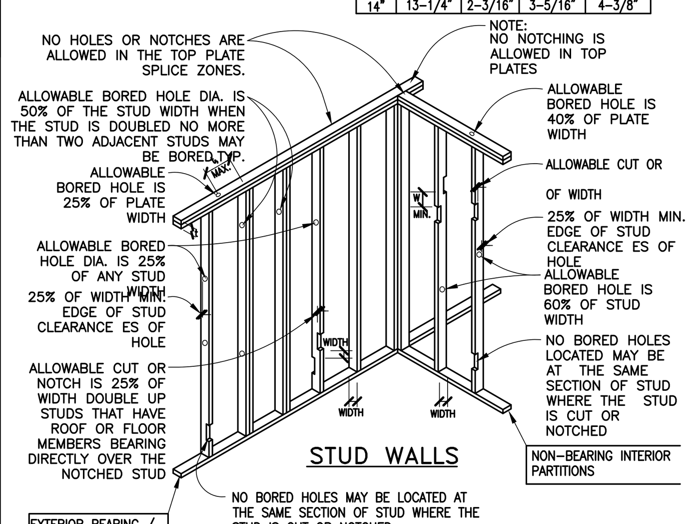

SIZE	STUD WIDTH		NOTCHING WIDTH		HOLE DIAMETER		
	NOM.	ACTUAL W/	25%	40%	25%	50%	60%
2x4	4"	3–1/2"	7/8"	1–7/16"	7/8"	1–3/4"	2–1/8"
2x6	6"	5–1/2"	1–3/8"	2–1/4"	1–3/8"	2–3/4"	3–5/16"
2x8	8"	7–1/4"	1–13/16"	2–7/8"	1–3/16"	3–5/8"	4–3/8"

NOTES:
1. HOLES AND NOTCHES ARE NOT TO BE LOCATED ADJACENT TO UNSOUND OR LOOSE KNOTS.
2. PREFERRED LOCATION OF NOTCH IS AT TOP OF MEMBER.
3. NO HOLES OR NOTCHES MAY BE MADE IN STUDS IN WALLS SUPPORTING SNOW LOADS, UNLESS THE STUD IS DOUBLED & STITCH NAILED TOGETHER.

SCALE: N.T.S.

CUT AND NOTCH
10

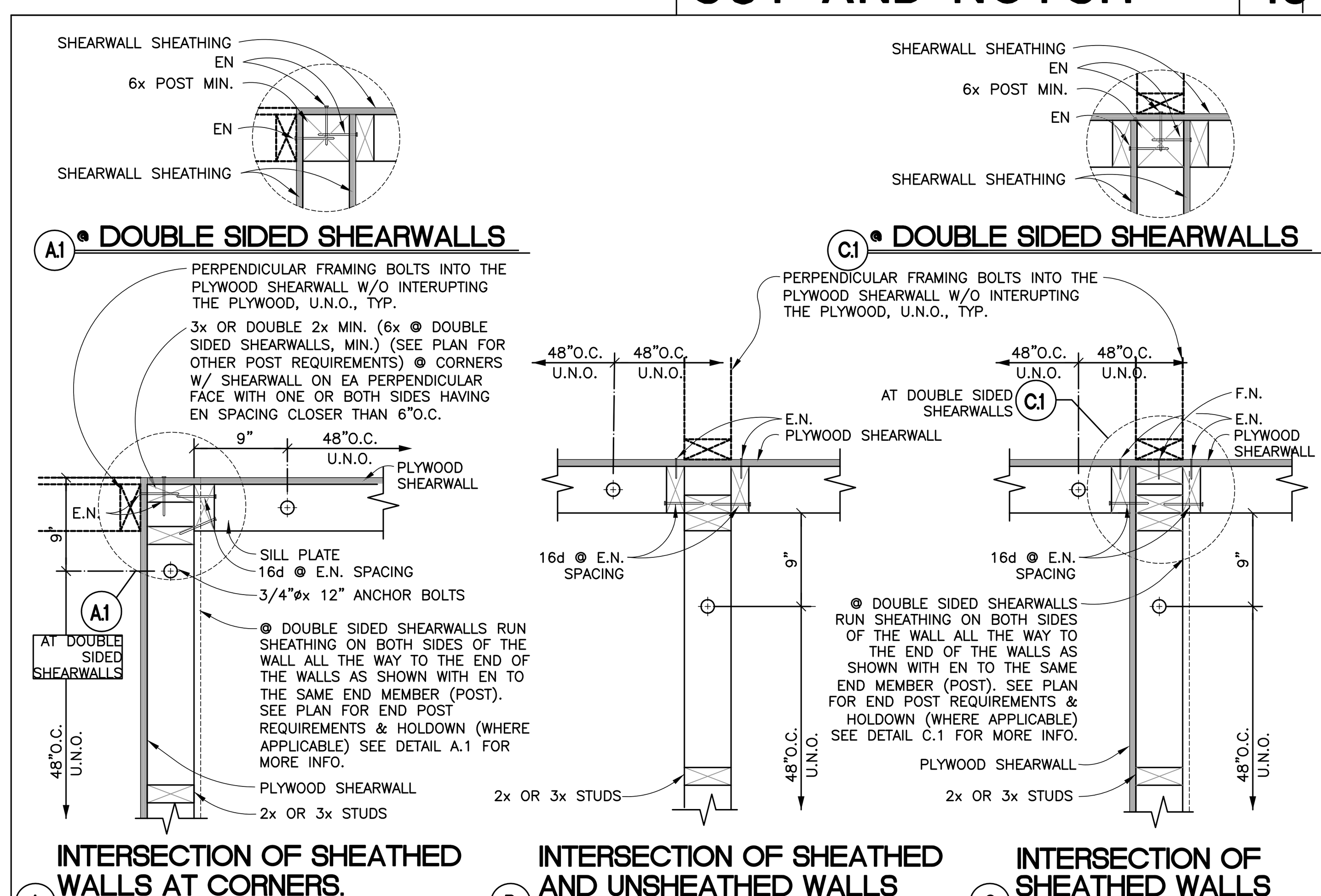

STUD WALL CORNERS AT INTERSECTIONS
SCALE N.T.S. | 11

WOOD I - JOISTS

FOR JOIST SPACING OF 32"O.C. AND LESS

JOIST FLANGE WIDTH RANGE	JOIST DEPTH OF JOIST RANGE	TOP FLANGE HANGER,[7] U.N.O.
1 1/2"	0–14	ITT
1 1/2"	16	LBV
1 3/4"	0–16	WM
2 1/4 – 2 5/16	0–12	WM
2 1/4 – 2 5/16	14–22	WP
2 1/4 – 2 5/16	24–30	HW
2 1/2 – 2 9/16	0–13	LBV
2 1/2 – 2 9/16	14–30	HWI
3 1/2	0–30	HWI

JOIST FLANGE WIDTH RANGE	JOIST DEPTH OF JOIST RANGE	FACE MOUNT HANGER, U.N.O.
1 1/2"	0–11 7/8	MIU
1 1/2"	14	IUT
1 3/4	0–20	MIU
2 5/16	0–30	HU (MAX.)
2 1/2	0–16	HU
2 1/2	18–26	MIU

DIMENSIONED LUMBER

JOIST	TOP FLANGE HANGER, U.N.O.	FACE MOUNT HANGER, U.N.O.	JOIST	TOP FLANGE HANGER, U.N.O.	FACE MOUNT HANGER, U.N.O.
2x4	HU24TF	LUS24	3x4	HU34TF	U34
2x6	JB26	LUS26	3x6	W36	U36
2x8	JB28	LUS26	3x8	W38	U36
2x10	JB210	LUS28	3x10	W310	U310
2x12	JB212	LUS210	3x12	WNP312	U310
2x14	LB214	LUS210	3x14	WNP314	U314
2x16	LB216	U214	3x16	WNP316	U314

JOIST	TOP FLANGE HANGER, U.N.O.	FACE MOUNT HANGER, U.N.O.	JOIST	TOP FLANGE HANGER, U.N.O.	FACE MOUNT HANGER, U.N.O.
4x4	HU44TF	LUS44	6x6	WNP66	HU66 (MAX.)
4x6	HUS46TF	LUS46	6x8	WNP68	HU68 (MAX.)
4x8	B48	LUS48	6x10	WNP610	HU610 (MAX.)
4x10	HUS410TF	LUS410	6x12	HW612	HU612 MAX.
4x12	HUS412TF	LUS412	6x14	HW614	HU614 MAX.
4x14	HUS414TF	LUS414	6x16	HW616	HU616 MAX.
4x16	WNP416	HU416 (MAX.)			

GLULAMS[6]

JOIST SIZE	TOP FLANGE HANGER, U.N.O.	FACE MOUNT HANGER, U.N.O.
3 1/8" GLULAM	LEG	HGUS / (GLULAM DEPTH)
5 1/8" GLULAM	EG	EG (W/O TOP FLANGE)
6 3/4" GLULAM	EG	EG (W/O TOP FLANGE)
8 3/4" GLULAM	EG	

NOTES:
1. THIS SCHEDULE GIVES TYPICAL HANGER SIZES, U.N.O. ON PLANS.
2. IF THE DETAILS DO NOT INDICATE WHETHER A TOP FLANGE OR FACE MOUNT HANGER IS USED CONTACT THE ENGINEER BEFORE SELECTING A HANGER.
3. THE HANGERS LISTED IN THE ABOVE TABLE ARE THE MINIMUM REQUIREMENTS FOR A SIMPSON STRONG TIE HANGER. THE CONTRACTOR MAY CHOOSE TO USE A HANGER OF THE SAME TYPE AS REQUIRED BY THE DETAILS BUT WITH GREATER STRENGTH PROPERTIES., U.N.O.
4. THE HANGER SCHEDULE IS ONLY APPLICABLE FOR HANGERS FOR ROOF JOIST U.N.O. (ie NOT FOR FLOOR JOIST)
5. WHERE A WOOD BEAM RUNS INTO A STEEL COLUMN USE A STEEL SADDLE WELDED TO STEEL COLUMN, U.N.O. (SEE "TYP. WOOD BEAM TO SIDE OF STEEL COLUMN" DETAIL)
6. TOP FLANGE HANGERS MUST BE USED AT ALL GLULAMS, U.N.O.
7. TOP FLANGE HANGER MUST BE USED AT ALL WOOD I–JOIST, U.N.O.
8. HANGERS FOR MANUFACTURED JOIST ARE SPECIFIED BY THE JOIST MANUFACTURER. SEE JOIST MANUFACTURER'S PLANS FOR MORE INFO.

TYP. HANGER SCHEDULE
7

SYM.	NOTES
①	NAILING 1) OVER BLOCKING = 16d OR 10d @ ALL ROUND HOLES (ie: 2 ROWS @ 3 1/2"O.C.) 2) OVER BEAMS & WALLS = 16d OR 10d @ ALL HOLES (ie: 2 ROWS @ 1 3/4"O.C.) 3) RUN THE END OF THE STRAP THE FULL LENGTH SHOWN GRAPHICALLY AND / OR DIMENSIONALLY ON THE PLAN. (SEE NOTE 4 FOR OTHER INFO.)
②	NAILING 1) OVER BLOCKING = 16d SINKERS @ ALL ROUND HOLES (ie: 2 ROWS @ 3" o/c) 2) OVER BEAMS & WALLS = 16d SINKERS @ ALL HOLES (ie: 2 ROWS @ 1 1/2"O.C.) 3) RUN THE END OF THE STRAP THE FULL LENGTH SHOWN GRAPHICALLY AND / OR DIMENSIONALLY ON THE PLAN. (SEE NOTE 4 FOR OTHER INFO.)
③	NAILING 1) ALL STRAP HOLES MUST BE NAILED W/ 10d NAILS, TYP. 2) RUN THE END OF THE STRAP THE FULL LENGTH SHOWN GRAPHICALLY AND / OR DIMENSIONALLY ON THE PLAN. (SEE NOTE 4 FOR OTHER INFO.)

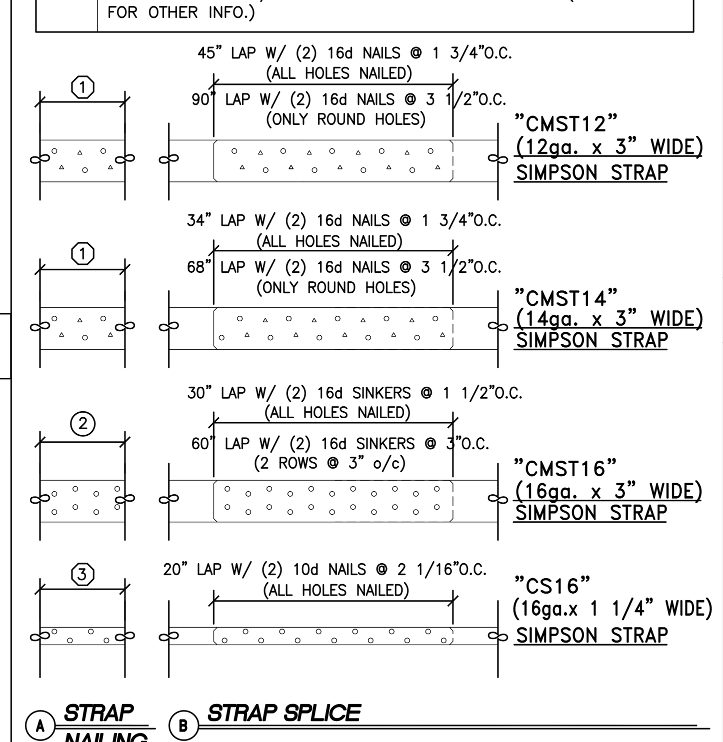

NOTE:
1) ALL OF THE STRAP MANUFACTURES AND I.C.C. RECOMMENDATIONS FOR STRAP USE AND INSTALLATION MUST BE FOLLOWED.
2) THE ENGINEER MUST BE CONTACTED IF THERE ARE ANY INSTALLATION QUESTIONS BEFORE INSTALLATION BEGINS.
3) OTHER MANUFACTURES MAY BE USED AT THE CONTRACTORS OPTION.
4) THE LAP SHOWN IS ALSO THE MINIMUM END LENGTH OF STRAP REQUIRED PAST A SPLICE LOCATION U.N.O
5) PRE–DRILL NAIL HOLES WHERE WOOD TENDS TO SPLIT.

STEEL COIL STRAP NAILING ? SPLICE
8

1. UNLESS SPECIFICALLY NOTED OTHERWISE NAILING SHALL BE DONE IN ACCORDANCE WITH THE FOLLOWING SCHEDULE, USING ONLY COMMON WIRE NAILS. NAILING NOT NOTED BELOW OR ON THE PLANS SHALL HAVE A MINIMUM OF 2 NAILS AT EACH CONTACT, 8d FOR 1x MATERIAL AND 16d FOR 2x MATERIAL.
2. NAILS SHALL NOT BE DRIVEN CLOSER TOGETHER THAN 1/2 THEIR LENGTH NOR CLOSER TO EDGE OF MEMBER THAN 1/4 THEIR LENGTH. HOLES SHALL BE BORED WHERE NECESSARY TO PREVENT SPLITTING. PENETRATION INTO THE PIECE RECEIVING THE POINT SHALL NOT BE LESS THAN 1/2 THE LENGTH OF THE NAIL.
3. WHERE POSSIBLE NAILS DRIVEN PERPENDICULAR TO GRAIN SHALL BE USED INSTEAD OF TOE NAILS.
4. BUILT UP BEAMS, JOIST, AND RAFTERS:

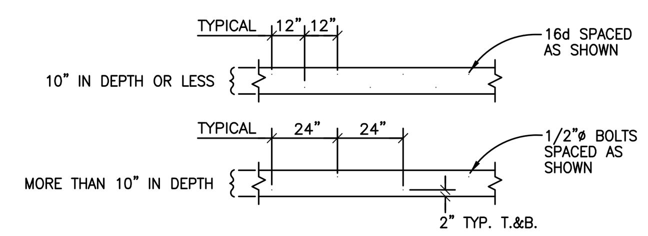

5. FOR PLYWOOD SHEATHING, SEE DIAPHRAGM DETAILS AND SCHEDULES. VERTICAL PANELS OF EXTERIOR GRADE PLYWOOD NOT INCLUDED IN THE PLYWOOD SHEATHING SCHEDULE SHALL BE NAILED WITH 8d AT 6"O.C. AT PERIMETER OF PANELS AND 8d AT 12"O.C. AT INTERMEDIATE BEARINGS.
   (a) WHERE THE DIAPHRAGM IS CURVED "OUT OF PLANE" (CURVE RADIUS = 6' OR GREATER) USE THREADED NAILS W/ THE SAME MIN DIA. & LENGTH CHARACTERISTICS SPECIFIED & WHEN THE CURVE RADIUS IS LESS THAN 6' (2 1/2' MIN) USE WOOD SCREWS W/ SIM OR GREATER DIA. AS NAIL REQUIREMENT & 3" LONG MIN.
6. STUDS TO BEARINGS USE TOE NAILS EACH SIDE: 2x4–(2) 10d, 2x6–(3) 10d, 2x8–(4) 10d. STUDS OVER 14'–0" HIGH AT EXTERIOR WALLS, PROVIDE A FRAMING CLIP ON ONE SIDE AT EACH END OF STUD IN LIEU OF TOE NAILS ON THAT SIDE.
7. BLOCKING BETWEEN STUDS, EACH END: (2) 10d TOE NAILS TOP & BOTTOM.
8. DOUBLE TOP PLATE NAILING LEGEND:
   (A) LOWER PLATES (TO STUD): 2x4–(2) 16d, 2x6–(3) 16d, 2x8–(4) 16d. (SEE NOTE NO. 7 FOR STUDS OVER 14' HIGH.)
   (B) UPPER PLATE TO LOWER PLATE, 16d NAILS:

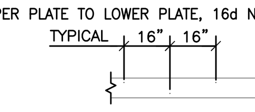

   (C) UPPER PLATE TO LOWER PLATE AT SPLICE: (8) 16d STAGGERED
9. MULTIPLE MEMBERS (KING, TRIMMER, POSTS) STICHED NAIL TOGETHER, STAGGER NAILS FOR STUD WIDTHS OVER 4": 16d @6"O.C.
10. MULTIPLE STUDS AT CORNERS AND INTERSECTIONS (AT CONTACTS): 16d @ 12"O.C.
11. DOUBLE JOIST UNDER PARTITIONS: WHERE NOT BLOCKED APART, WILL BE SAME AS BUILT UP BEAMS NOTE NO.5. WHERE BLOCKED APART (AT EACH BLOCK SIDE): (2) 16d.
12. TOE–NAILS SHALL BE DRIVEN AT AN ANGLE OF APPROXIMATELY 30° WITH THE MEMBER AND STARTED APPROXIMATELY 1/3 THE LENGTH OF THE NAIL FROM THE MEMBER END

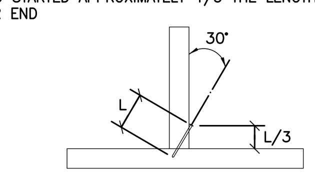

13. NAILS SHALL ACHIEVE THE MINIMUM PENETRATION SPECIFIED IN THE TABLE BELOW. NAILS SHALL NOT BE DRIVEN CLOSER TOGETHER THAN THE MINIMUM SPACING NOR CLOSER TO THE MEMBERS END OR EDGE THAN 1/2 THE MINIMUM SPACING. HOLES SHALL BE BORED WHERE NECESSARY TO PREVENT SPLITTING.

COMMON WIRE NAIL PROPERTIES

PENNY WEIGHT (SIZE)	NAIL DIAMETER	MINIMUM PENETRATION * AND SPACING
6d	.113	1.36"
8d	.131	1.57"
10d	.148	1.78"
16d	.162	1.94"
20d	.192	2.30"

* PENETRATION INTO THE PIECE RECEIVING THE POINT

14. NAILS USED IN PRESSURE TREATED LUMBER SHALL BE HOT DIPPED GALVANIZED.

FOR CONDITIONS NOT LISTED, REFER TO TABLE 2304.9.1 OF THE 2012 IBC

15. BRIDGING TO JOIST, TOENAIL EACH END 2–8d
16. SOLE PLATE TO JOIST OR BLOCKING, BLOCKING, FACE NAIL .... 16d @ 16"O.C.
17. TOP PLATE TO STUD, END NAIL (NOT REQUIRED WHERE A35 ANCHORS ARE USED) .... 2–16d FOR 2x4; 3–16d FOR 2x6; 4–16d FOR 2x8
18. STUD TO SOLE PLATE (USE ONE HALF OF REQUIRED TOE NAILS ON ONE SIDE WHERE A35 ANCHORS ARE USED). .... 4–8d TOENAILS OR 2–16d ENDNAILS W/ 2x SILL
    2x6 .... 6–8d TOENAILS OR 3–16d ENDNAILS W/ 2x SILL
    2x8 .... 8–8d TOENAILS OR 4–16d ENDNAILS W/ 2x SILL
19. DOUBLE STUDS, FACE NAILS .... 16d @ 12"O.C. STAGGERED
20. DOUBLE TOP PLATES, FACE NAILS .... 16d @ 16"O.C.
21. TOP PLATES, LAPS AT INTERSECTIONS, FACE NAILS 2–16d
22. CEILING JOIST TO PLATE, TOENAIL 3–16d
23. STUD TO CONTINUOUS HEADER, TOENAIL 4–8d
24. CEILING JOIST, LAPS OVER PARTITIONS, FACE NAILS 3–16d
25. CEILING JOIST TO PARALLEL RAFTERS, FACE NAILS 3–16d
26. 1" BRACE TO EACH STUD AND PLATE, FACE NAILS 2–8d
27. DOUBLE RAFTERS, FACE NAIL .... 16d @ 12"O.C.
28. BUILT UP STUDS .... 16d @ 24"O.C.
29. BLOCKING BETWEEN JOISTS OR RAFTERS TO JOIST OR RAFTERS
    TOENAILS, EACH SIDE, EACH END 2–10d
    TO JOIST OR RAFTER BEARINGS TOENAILS EACH END 2–10d
30. BLOCKING BETWEEN STUDS .... 2–16d OR 2–10d TOENAILS
31. 1x8, OR LESS, SHEATHING EACH BEARING 2–8d
32. BLOCKING BETWEEN JOISTS OR RAFTERS TO TOP PLATE .... 3–8d TOENAILS
33. CEILING JOISTS TO TOP PLATE .... 3–8d TOENAILS
34. JOIST TO SILL OR GIRDER, TOE NAIL 3–8d
35. 1"x6" SUBFLOOR OR LESS TO EACH JOIST, FACE NAIL .... 2–8d; 2 STAPLES 1 3/4"
36. 2" SUBFLOOR TO JOIST OR GIRDER, BLIND AND FACE NAIL 2–16d
37. BUILT–UP HEADER, TWO PIECES WITH 1/2" SPACER .... 16d @ 16"O.C. ALONG EACH END
38. CONTINUED HEADER, TWO PIECES .... 16d @ 16"O.C. ALONG EACH END
39. 1" BRACE TO EACH STUD AND PLATE, FACE NAIL 2–8d
40. BUILT–UP GIRDERS AND BEAMS, 2" LUMBER LAYERS .... 10d NAIL EACH LAYER AS FOLLOW: 32"O.C. AT TOP AND BOTTOM AND STAGGERED. TWO NAILS AT ENDS AND AT EACH SPLICE.
41. ROOF RAFTERS TO RIDGE, VALLEY OR HIP RAFTERS:
    TOE NAIL 4–16d
    FACE NAIL 3–16d
42. RAFTERS TIES TO RAFTERS, FACE 3–8d
43. ALL NAILS EXPOSED TO THE WEATHER SHALL BE GALVANIZED.
44. JOIST TO LEDGER 3– 16d (ONLY @ JOISTS W/ TOTAL LENGTH OF 4' OR LESS
45. JOISTS/TRUSSES OR RAFTERS AT BEARING, TOENAIL EACH SIDE 2–10d
46. CEILING/SOFFIT JOISTS TO PERPENDICULAR LEDGER/BEAM .... 3–16d OR FM HANGER @ 2x4; 4–16d OR FM HANGER @ 2x6; 5–16d OR FM HANGER @ 2x8; 6–16d OR FM HANGER @ 2x10; 7–16d OR FM HANGER @ 2x12; FM HANGER @ WOOD I–JOIST

TYPICAL NAILING SCHEDULE U.N.O.
3

NOTES:
1. HOLDOWN BOLTS SHALL NOT REPLACE SILL ANCHOR BOLTS.
2. ANCHOR BOLTS WITH UPSET THREADS SHALL NOT BE USED.
3. SILL PL. W/ HOLE OR NOTCH LARGER THAN THE SILL WIDTH SHALL REQUIRE EXTRA ANCHOR BOLTS, SAME AS AT END OF SILL PIECE.
4. HEADER / BEAM SIZES ARE TYP. U.N.O. OR DETAILED OTHERWISE
5. SEE NAILING SCHEDULE FOR TYP. NAILING U.N.O.
6. A WALL STUD MUST BE PLACED UNDER ALL ROOF TRUSSES BEARING ON A WALL THAT ARE OVER 20' IN LENGTH TYP. UNO. STUDS MAY BE PLACED @ 12"O.C. @ CONTRACTOR OPTION.
7. MULTIPLE WALL STUDS MUST BE PLACED UNDER ALL BEAMS & MULTIPLE TRUSSES BEARING ON THE WALL, (TRIPLE @ MEMBERS OVER 18' IN LENGTH TYP. U.N.O.
8. WHERE A DIMENSION LUMBER BEAM IS SPECIFIED THE CONTRACTOR MAY CHOOSE TO USE A GLULAM BEAM OF EQUAL OR GREATER NOMINAL WIDTH & DEPTH.

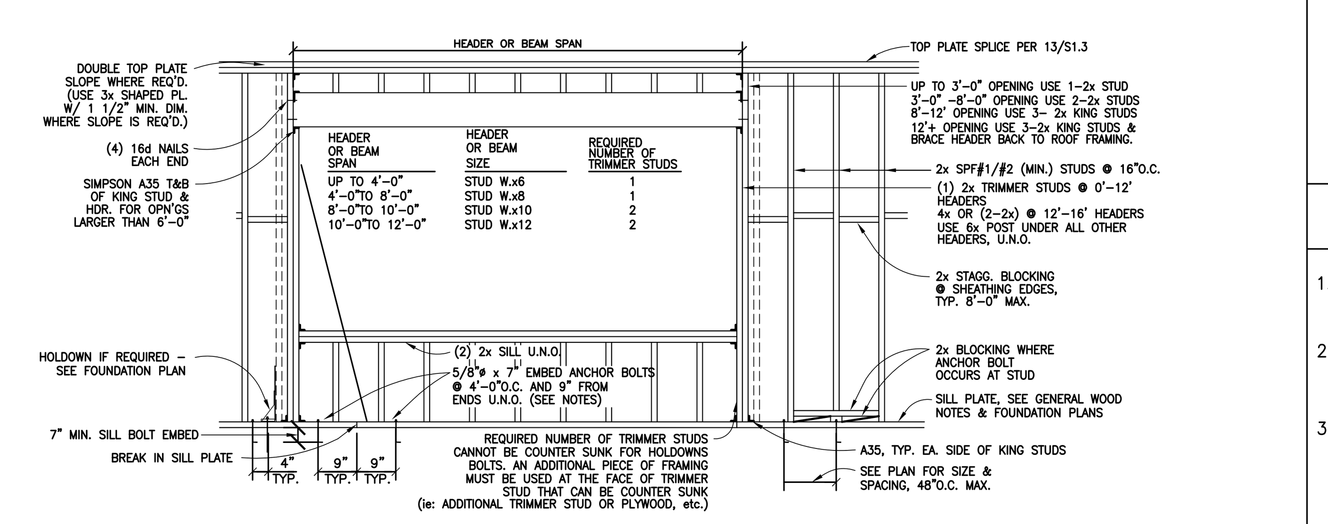

SCALE: N.T.S.

TYP. WOOD WALL FRMG. PLUS TYP. HEADER BEAM SIZES
4

NOTE:
BLOCK ALL SHEATHING EDGES WHEN ROOF FRAMING CHANGES DIRECTIONS WITHIN 16' OF DIAPHRAGM BOUNDARIES (i.e. @ TURN FRAMING, etc.) PROVIDE SHEATHING BN TO FRAMING LINE THAT DIVIDES FRAMING DIRECTION CHANGES (i.e.. TWO ROWS OF BN – ONE ES OF CHANGE TO SAME FRAMING MEMBERS

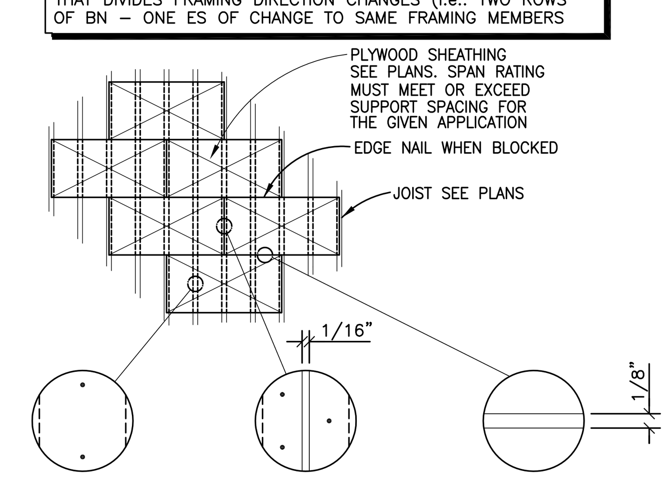

SCALE: N.T.S.

ROOF AND FLOOR DIAPHRAGM
6

NOTE:
WHERE PLYWOOD OCCURS ON EACH SIDE OF THE STUD WALL THE NAILING @ EACH SHEARWALL MUST BE STAGGERED FROM SIDE TO SIDE (ie: EN @ 6"O.C. ON EACH SIDE WOULD BE STAGGERED VERTICVALY ON THE STUDS SO EFFECTIVELY THERE WILL BE NAILS @3"O.C. THE SAME CONCEPT APPLIES TO NAILING ON HORIZONTAL FRAMING)

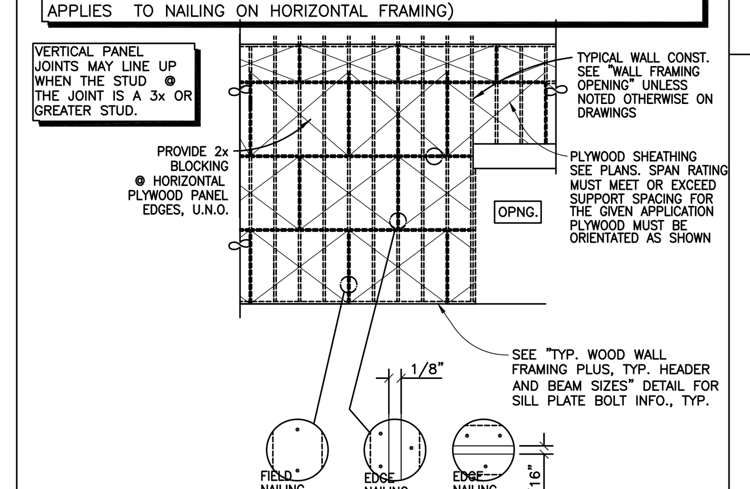

SCALE: N.T.S.

SHEAR WALL DIAPHRAGM
5

1. UNLESS SPECIFICALLY SHOWN OTHERWISE, BOLTS WHERE CALLED FOR ON THE DRAWINGS SHALL BE MACHINE MADE A307 TYPE.
2. ALL BOLTS AND LAG SCREWS SHALL BE PROVIDED WITH STANDARD STEEL WASHERS UNDER HEAD AND NUTS WHICH BEAR ON WOOD ACCORDING TO THE WASHER SCHEDULE ON THIS SHEET, UNLESS SPECIFICALLY NOTED OTHERWISE
3. BOLTS AND SCREWS SHALL BE TIGHTENED AT TIME OF ERECTION AND RE–TIGHTENED BEFORE CLOSING IN OR AT COMPLETION OF JOB.
4. SILL PLATES OF INTERIOR WALLS THAT ARE COVERED WITH STRUCTURAL PLYWOOD (SHEAR PANEL) AND EXTERIOR WALLS, SHALL BE FOUNDATION GRADE PRESSURE TREATED S.P.F. 2x OR 3x (SEE SHEARWALL SCHEDULE) THICK AND OF SAME WIDTH AS STUDS. ALL OTHER WALLS THE SAME EXCEPT PLATES SHALL BE 2x THICK PRESSURE TREATED FIR. PRESSURE TREATED S.P.F. SHALL BEAR THE AWPB QUALITY MARK AND ALL CUTS OR HOLES SHALL BE RE–TREATED PRIOR TO INSTALLATION.
5. NO SILL PLATE PIECE SHALL END WITHIN THE LENGTH OF SHEAR PANEL UNLESS SPECIFICALLY SHOWN AND DETAILED ON THE PLANS.
6. BEARING WALLS AND PARTITIONS SHALL HAVE DOUBLE TOP PLATES, PROVIDE METAL FRAMING ANCHOR AT EACH SIDE OF TOP PLATE AT INTERSECTING WALL PARTITIONS.
7. PLYWOOD NOTES:
   A. IN HORIZONTAL PLYWOOD DIAPHRAGMS, NO PANEL LESS THAN 24" WIDE SHALL BE USED. IN VERTICAL PLYWOOD DIAPHRAGMS, NO PANEL LESS THAN 12" WIDE SHALL BE USED.
   B. ANY PIECE OF PLYWOOD SPANNING ACROSS FEWER THAN 3 SUPPORTS SHALL BE BLOCKED ON ALL EDGES.
   C. SHEAR WALL PLYWOOD SHALL BE BLOCKED ALL EDGES.
8. ANCHOR AND/OR SILL BOLTS WITH UPSET THREADS ARE NOT PERMITTED.
9. BOLT HOLES IN WOOD SHALL BE OVERSIZED BY 1/32". STANDARD WASHERS SHALL BE USED UNDER ALL HEADS AND NUTS BEARING ON WOOD
10. ALL BOLTS IN WOOD SHALL BE SPACED FOUR DIAMETERS MINIMUM AND SEVEN DIAMETERS MINIMUM END DISTANCE, UNLESS OTHERWISE NOTED.
11. PREDRILL HOLES WHERE WOOD TENDS TO SPLIT.
12. LUMBER SHALL BE GRADED IN ACCORDANCE WITH ANSI/AF&PA NDS–2012 CLASSIFICATION. DEFINITION AND METHODS OF GRADING FOR ALL SPECIES OF LUMBER. SOLID SAWN LUMBER SHALL BE GRADE MARKED SPRUCE PINE FIR (S.P.F.) 19% MOISTER CONTENT MAXIMUM AS FOLLOWS:
   a) HORIZONTAL FRAMING MEMBERS (JOIST, RAFTERS, & BEAMS): S.P.F. #1 U.N.O.
   b) VERTICAL FRAMING MEMBERS (POST, 4x AND LARGER): S.P.F. #1 (STUDS 2x AND 3x): S.P.F. #1/#2
   c) PLANKING, 2" OR MORE IN DEPTH: S.P.F. #1/#2
13. STRUCTURAL GLUED–LAMINATED TIMBER SHALL CONFORM TO ANSI / AITC STANDARDS A190.1 AND ASTM D373709. THE FABRICATION SHALL BE PERFORMED IN AN APPROVED FABRICATIONS SHOP IN ACCORDANCE WITH IBC 1704.2 DESIGN AND MANUFACTURE OF STRUCTURAL GLUED– LAMINATED TIMBER. GLUED LAMINATED TIMBER SHALL HAVE THE FOLLOWING MATERIAL PROPERTIES: SIMPLE SPANS: COMBINATION 24F–V4 DF/DF, CANTILEVERED SPANS: COMBINATION 24F–V8 DF/ DF, FB=2400, PSI FV=165 PSI, E=1,800,00 PSI, Fc=650 PSI, U.N.O.
14. PLYWOOD SHALL CONFORM TO PS1–95 STANDARDS CONSTRUCTION AND INDUSTRIAL PLYWOOD (5 PLY MIN.) PLYWOOD SHALL BE MANUFACTURED USING EXTERIOR GLUE. PLYWOOD DIAPHRAGMS AND SHEAR WALLS SHALL BE CONSTRUCTED WITH PLYWOOD SHEETS NOT LESS THAN 4' BY 8'. EXCEPT AT BOUNDARIES AND CHANGES IN FRAMING WHERE MINIMUM SHEET DIMENSION SHALL BE 24" UNLESS ALL EDGES OF THE UNDERSIZED SHEETS ARE SUPPORTED BY FRAMING MEMBERS OR BLOCKING. FRAMING MEMBERS OR BLOCKING SHALL BE PROVIDED AT THE EDGES OF ALL SHEETS IN SHEAR WALLS. DIAPHRAGM SHEATHING NAILS OR OTHER APPROVED SHEATHING CONNECTORS SHALL BE DRIVEN FLUSH BUT SHALL NOT FRACTURE THE SURFACE OF THE SHEATHING. SPAN RATING MUST MEET OF EXCEED SUPPORT SPACING FOR THE GIVEN APPLICATION.
15. LUMBER SHALL NOT BE CUT OR NOTCHED UNLESS APPROVED, IN WRITING, BY THE ENGINEER OF RECORD.
16. ENDS OF WOOD GIRDERS ENTERING MASONRY OR CONCRETE WALLS SHALL BE PROVIDED WITH A 1/2" AIR SPACE ON TOPS SIDES AND ENDS.
17. THE NUMBER AND SIZE OF NAILS CONNECTING WOOD MEMBERS SHALL NOT BE LESS THAN THAT SET FORTH IN THE IBC FOR STANDARD CONSTRUCTION.
18. COLUMNS:
    SEE SPECIFICATIONS FOR GRADE REQUIRED. EXPOSED COLUMNS SHALL BE SET PLUMB WITHIN ± 1/8"
19. THE CONTRACTOR SHALL USE CONVENTIONAL FRAMING TECHNIQUES WHEN FRAMING THIS STRUCTURE. WHEN THE DETAILS OR PLANS DON'T SHOW OTHERWISE, CONTACT THE ENGINEER WITH ANY FRAMING QUESTIONS BEFORE BEGINNING CONSTRUCTION.
20. ALL METAL CONNECTORS IN THESE PLANS ARE MANUFACTURED BY SIMPSON STRONG TIE. THE CONTRACTOR MAY USE A SIMILAR PRODUCT BY A DIFFERENT MANUFACTURE IF THE STRUCTURAL VALUES FOR THAT PRODUCT ARE EQUAL TO OR GREATER THAN FOR THE PRODUCT SPECIFIED. THE CONTRACTOR MUST PROVIDE DOCUMENTION THAT PROVIDES A SIDE BY SIDE COMPARISON OF THE TWO PRODUCTS FOR A GENERAL REVIEW FROM THE ENGINEER OF RECORD.
21. ALL NEW FRAMING LUMBER SHALL HAVE 19% MAX. MOISTURE CONTENT WHEN THE ROUGH FRAMING PACKAGE IS FINISHED AND BEFORE ANY ADDITIONAL INTERIOR FRAMING BEGINS.
22. WHEN COUNTERSINKING IS REQUIRED BY A DETAIL IN THESE PLANS. THE DEPTH OF THE COUNTERSINK CAN ONLY BE 1/4" GREATER THAN THE THICKNESS OF THE BOLT HEAD OR NUT & WASHER.
23. PROVIDE A DOUBLE ROW OF BN TO ALL FRAMING ON IDENTIFIED STRUT AND/OR COLLECTOR LINES (ie: IF PLYWOOD EDGES ARE ON A STRUT AND/OR COLLECTOR LINE THERE WILL BE 4 ROWS OF BN STAGGERED IF THE STRUT AND/OR COLLECTOR IS AT THE EDGE OF A DIAPHRAGM OR IN THE MIDDLE OF A SHEET OF PLYWOOD (NOT @ EDGE OF PLYWOOD) THERE WILL BE 2 ROWS OF BN STAGGERED TYP.)
24. ALL LAG SCREWS SHALL HAVE LEAD HOLES AS FOLLOWS
    a) THE CLEARANCE HOLE FOR THE SHANK SHALL HAVE THE SAME DIAMETER AS THE SHANK, AND THE SAME DEPTH OF PENETRATION AS THE LENGTH OF UNTHREADED SHANK.
    b) THE LEAD HOLE FOR THE THREADED PORTION SHALL HAVE A DIAMETER EQUAL TO 60% TO 75% OF THE SHANK DIAMETER IN THE WOOD AND A LENGTH EQUAL TO AT LEAST THE LENGTH OF THE THREADED PORTION. THE LARGER PERCENTILE SHALL APPLY TO LAG SCREWS OF GREATER DIAMETERS. THE THREADED PORTION OF THE LAG SCREW SHALL BE INSERTED IN ITS LEAD HOLE BY TURNING WITH A WRENCH NOT BY DRIVING WITH A HAMMER. SOAP OR OTHE LUBRICANT SHALL BE USED ON THE LAG SCREWS OR IN THE LEAD HOLES TO FACILITATE INSERTION AND PREVENT DAMAGE TO THE LAG SCREW.

GENERAL WOOD NOTES
1

1. THE PREMANUFACTURED STEEL CONNECTOR STRAPS AND CLIPS WITHIN THESE PLANS ARE TO BE MANUFACTURED BY SIMPSON STRONG TIE OR EQUIVALENT.
2. THE MANUFACTURES RECOMMENDATION FOR NAIL SIZE (WHEN CONNECTING TO WOOD & SMS WHEN CONNECTING TO STEEL) AND SPACING MUST BE FOLLOWED TO OBTAIN FULL CONNECTOR VALUES, UNO
3. THE CONTRACTOR MUST FOLLOW THE REQUIRED MINIMUM END LENGTHS, NAIL SIZE AND SPACING PROVIDED BY THE STRAP MANUFACTURE WHEN USING STEEL COIL STRAPS. SEE THE PLANS FOR ANY ADDITIONAL END LENGTH REQUIREMENTS IF ANY. COIL STRAPS MUST BE NAILED AT 3 1/2"O.C. (MAX) FOR THEIR ENTIRE LENGTH TYP. (TIGHTER SPACING MAY BE REQUIRED @ ENDS PER THE MANUFACTURE OR PER PLAN)
4. ALL STRAPS SHOULD BE CENTERED ON THE JOINT BETWEEN THE TWO PIECES OF FRAMING BEING CONNECTED, UNO.
5. WHEN STRAP/CLIPS ARE CONNECTED TO STEEL FRAMING THE CONTRACTOR MUST USE A SMS WITH THE SAME GAGE (DIAMETER) AS THE LISTED NAIL (BY THE MANUFACTURE). THE SCREW MUST BE LONG ENOUGH TO GO THROUGH ALL FRAMING & EXTEND BEYOND 1/2". (CONTACT THE ENGINEER BEFORE BEGINNING CONSTRUCTION IF THERE ARE ANY QUESTIONS)

STEEL STRAP NOTES
2

FOR BID ONLY

GreenbergFarrow
1430 W. Peachtree St., Suite 200
Atlanta, GA 30309
t: 404 601 4000 f: 404 601 3980

COPYRIGHT NOTICE
This drawing is the property of the above referenced Professional and is not to be used for any purpose other than the specific project and site named herein, and cannot be reproduced in any manner without the express written permission from the Professional

ISSUE/REVISION RECORD

DATE	DESCRIPTION
01/19/15	PERMIT SET

BARRY LEVIN & ASSOCIATES
STRUCTURAL ENGINEERS
301 PERIMETER CENTER NORTH
SUITE 100 ATLANTA, GEORGIA 30346
PHONE 770-457-2376 FAX 770-457-0514
WWW.BARRYLEVIN.COM

PROFESSIONAL SEAL
COLORADO REGISTERED BARRY LEVIN 29311 PROFESSIONAL ENGINEER
JAN 1 9 2015

PROFESSIONAL IN CHARGE
B LEVIN
PROJECT MANAGER
R NEW
QUALITY CONTROL
R NEW
DRAWN BY
J MITCHELL

PROJECT NAME
CIRCLE K STORES, INC.

COLORADO SPRINGS COLORADO

E. FOUNTAIN BLVD & ACADEMY PARK LOOP

CIRCLE K STORES INC.

PROJECT NUMBER
2014–066

SHEET TITLE
TYPICAL SECTIONS & DETAILS

SHEET NUMBER
S1.3-CS

Drawing Name: C:\Vault Workspace\GA\2014–000\2014–066 Circle K – Colorado Springs, CO\0Structural (BLA Generated)\0Drawings\Store\2014–066 Circle K Colorado Springs, CO – Store – S1.3.dwg Last Modified: Dec 17, 2014 – 7:05pm Plotted on: Jan 19, 2015 – 8:25am by jmitchell