CIRCLE K SOUTHWEST PROTOTYPE 4480 – 08/13/2013

Drawing Name: C:\Vault Workspace\GA\2014-000\2014-066 Circle K - Colorado Springs, CO\0Structural (BLA Generated)\0Drawings\Store\2014-066 Circle K Colorado Springs, CO – Store – S1.2.dwg Last Modified: Dec 17, 2014 – 7:05pm Plotted on: Jan 19, 2015 – 10:02am by jmitchell

1. ALL CONCRETE MATERIAL AND WORKMANSHIP SHALL CONFORM TO ACI 318–11 AND TO ALL REQUIREMENTS OF ACI 301–10, SPECIFICATIONS FOR STRUCTURAL CONCRETE FOR BUILDINGS, EXCEPT AS MODIFIED BY THE SUPPLEMENT REQUIREMENTS BELOW.
2. SEE CONCRETE NOTES ON SHEET S1.2 FOR ADDITIONAL INFORMATION.
3. IF MOISTURE BARRIER IS REQUIRED BY SOILS ENGINEER OR ARCHITECT, PROVIDE 2" MINIMUM COMPACTABLE GRANULAR FILL OVER BARRIER UNLESS OTHERWISE NOTED IN SOIL REPORT.
4. MIX DESIGN REQUIREMENTS:
   a) THE CONCRETE SUPPLIER MUST BEAR THE TOTAL RESPONSIBILITY THAT THE MIX DESIGNS WILL ATTAIN THE REQUIRED STRENGTH AND ACCEPTABLE SHRINKAGE CHARACTERISTICS. ACCEPTANCE OF MIX DESIGN BY THE ENGINEER WILL BE BASED ONLY ON CONFORMANCE OF SPECIFIED DESIGN STRENGTH, DESIGN SLUMP, AND AGGREGATE SIZE.
   b) SEE TABLE UNDER CONCRETE NOTES ON THIS SHEET FOR CONCRETE STRENGTH REQUIREMENTS.
5. HOT WEATHER CONCRETING: COMPLY WITH THE RECOMMENDATIONS OF SECTION 7.6 ACI 301 REGARDING PLACING OF CONCRETE DURING HOT WEATHER.
   a) WHEN AIR TEMPERATURE IS ABOVE 80° F, THE GUIDELINES FOR PROTECTING THE CONCRETE FROM PLASTIC SHRINKAGE CRACKING AND CRAZE CRACKING, BY PROVIDING A TEMPERATURE CONTROLLED MIX AND PROTECTING THE CONCRETE SURFACE FROM RAPID WATER EVAPORATION AS DESCRIBED IN ACI 305R, SHALL APPLY.
   b) WHEN THE RATE OF EVAPORATION EXCEEDS 0.2 POUNDS PER SQUARE INCH PER HOUR, THE CONTRACTOR SHALL TAKE THE NECESSARY PRECAUTIONS AGAINST PLASTIC SHRINKAGE CRACKING AS DESCRIBED IN ACI 305R.

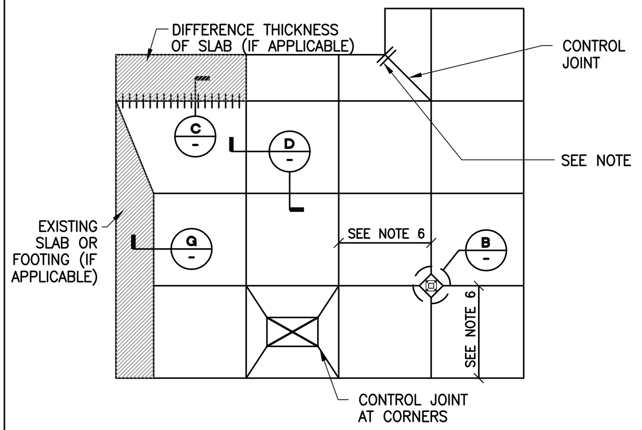

6. SAW CUT JOINTS IN CONCRETE SLAB AT LOCATIONS SHOWN ON FOUNDATION PLAN. SAW CUT JOINTS AS SOON AS THE SLAB WILL SUPPORT THE WEIGHT OF THE SAW AND OPERATOR WITHOUT DISTURBING THE FINAL FINISH. THE DISTANCE BETWEEN SAW CUT JOINTS SHALL BE 24 (8'–0" MIN.) TO 30 (16'–0" MAX.) TIMES THE SLAB THICKNESS, UNLESS OTHERWISE NOTED. THE CONTROL JOINT SYSTEM SHOULD DIVIDE THE SLAB INTO SECTIONS OF NOT MORE THAN 250 SQUARE FEET OF SURFACE AREA, U.N.O.
7. IF JOINTS NEED SUPPORT AT EDGES TO WITHSTAND THE ACTION OF SMALL HARD–WHEEL TRAFFIC. THIS ENGINEER RECOMMENDS FILLING THE JOINTS WITH AN EPOXY JOINT FILLER IF SUCH USAGE IS ANTICIPATED.
8. MAXIMUM RATIO OF LONG SIDE TO SHORT SIDE SHALL BE 1 1/2 : 1
9. PROVIDE CONSTRUCTION JOINT AT THE END OF CONCRETE PLACEMENT FOR THE DAY.
10. PROVIDE 2– #4 X 4'–0" LONG AT 4" O.C. AT MID–DEPTH OF SLAB AT CORNERS OF BLOCK–OUTS AND AT RE–ENTRANT CORNERS WHERE CONTROL JOINTS DO NOT OCCUR AND WHEN RE–ENTRANT CORNERS OR BLOCKOUTS EXCEED 15% OF THE PIECE OF SLAB PER 12/S1.2
11. SEE FOUNDATION PLAN FOR ADDITIONAL INFORMATION.
12. CONTRACTOR MUST FAMILIARIZE THEMSELVES WITH THE SOILS REPORT FOR SUBGRADE/SUB SLAB PREPARATION AND FOLLOW ALL RECOMMENDATIONS.
13. BUILDING SLAB IS NOT DESIGNED TO SUPPORT CRANE LOADS, CONCRETE MIXING TRUCKS, OR OTHER SPECIFIC CONSTRUCTION LOADINGS. IF SUCH LOADS OCCUR DURING CONSTRUCTION. THE CONTRACTOR SHALL BE RESPONSIBLE TO UPGRADE THE SLAB THICKNESS AND PROVIDE ADDED REINFORCING AS REQUIRED. ANY DAMAGE CAUSED TO THE SLAB SHALL BE REPAIRED AT THE CONTRACTOR'S EXPENSE PER THE OWNERS REQUEST.
14. WHERE DEPRESSIONS OCCUR IN THE SLAB BELOW THE NORMAL T.O. SLAB ELEVATION TO ACCOMMODATE THE REQUIREMENTS OF THE ARCHITECTS OR PLUMBING PLANS, THE SLAB SHALL BE THICKENED TO MEET THE REQUIRED SLAB THICKNESS REQUIRED BY THE FOUNDATION PLAN. SEE THIS DETAIL FOR OTHER REQUIREMENTS
15. AN IMPERVIOUS MEMBRANE (VAPOR BARRIER) SHOULD BE PLACED UNDER ALL SLABS (THE ONLY EXCEPTIONS IS A SLABS WHERE MOISTURE TRANSMISSIONS THROUGH THE SLAB WILL NOT DAMAGE, ALTER, OR HARM ANY PART OF THE STRUCTURE, INTERIOR, AND OCCUPANTS). A 15 MIL. (MIN.) MEMBRANE SHOULD BE USED THAT MEETS THE REQUIREMENTS OF ASTM E1745, THE MEMBRANE JOINTS SHOULD BE SPLICED & TAPED TYP.
16. ALL REFERENCE TO FIBERMESH IN THESE PLANS REFERS TO THE PRODUCT BY SI CONCRETE SYSTEMS "FIBERMESH 300" TYP. U.N.O.

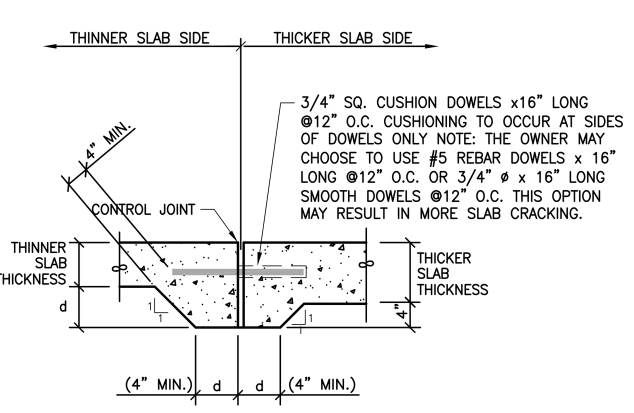

A JOINING OF SLABS OF DIFFERENT THICKNESSES
(IF APPLICABLE)

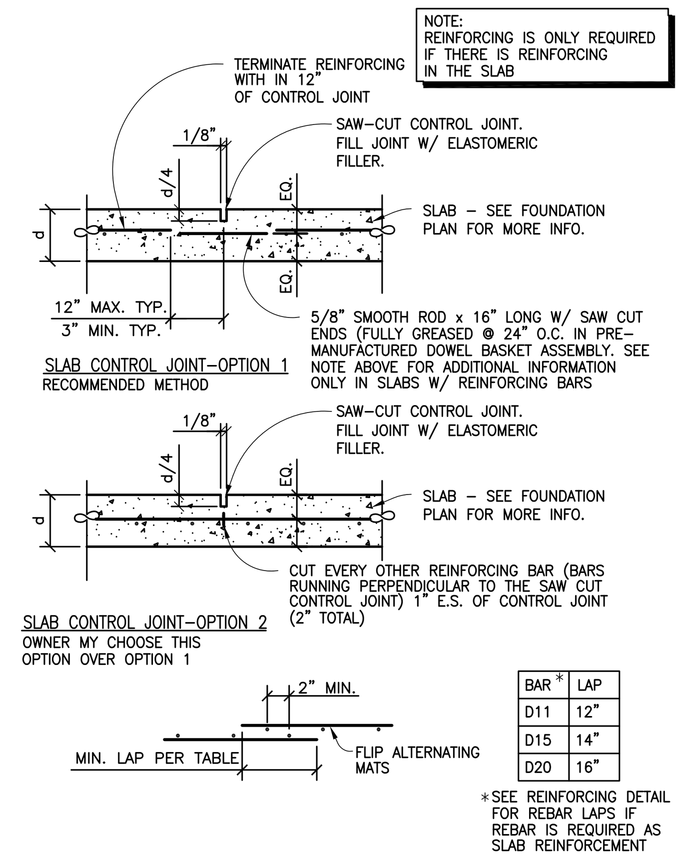

B CONTROL JOINT

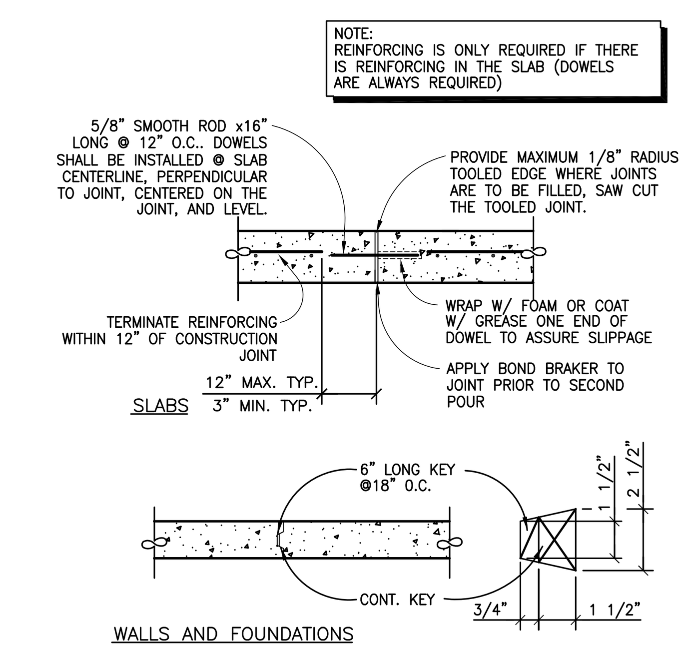

C CONSTRUCTION JOINT

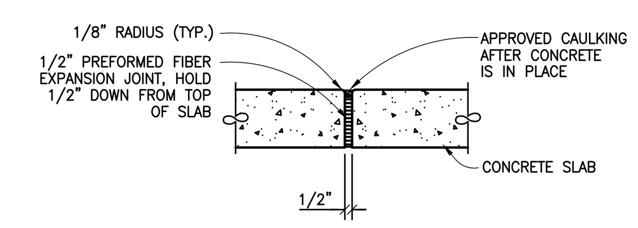

D EXPANSION / ISOLATION JOINT

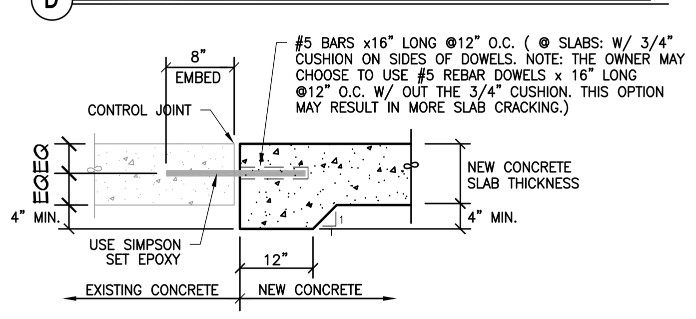

E JOINING (E) CONCRETE W/ (N) CONCRETE
(IF APPLICABLE)

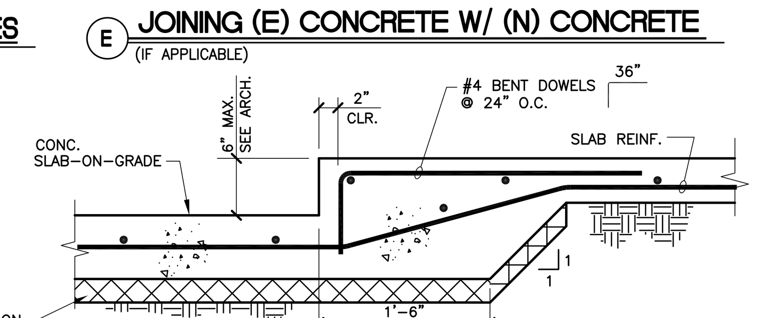

F SLAB DEPRESSIONS
(IF APPLICABLE – SEE ARCH'L. PLANS FOR LOCATIONS, DEPTH, & DIMENSIONS)

TYPICAL SLAB ON GRADE — 11
SCALE N.T.S.

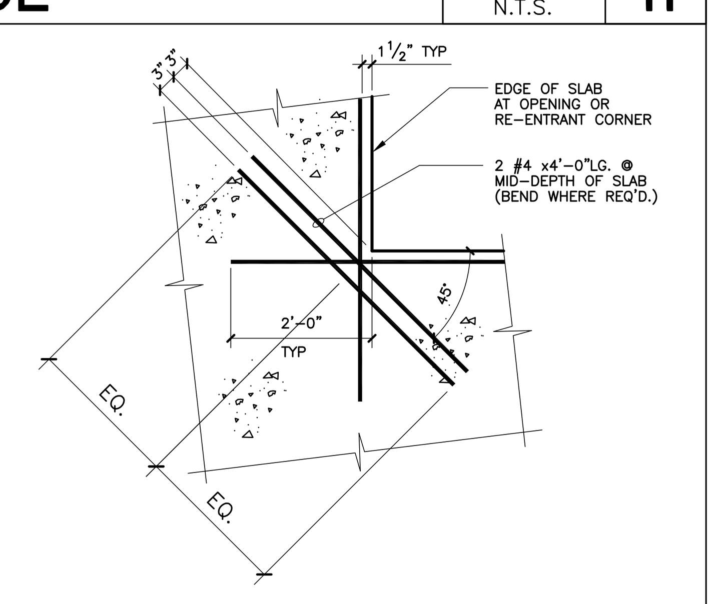

REINF. SLAB OPNG. — 12
SCALE N.T.S.

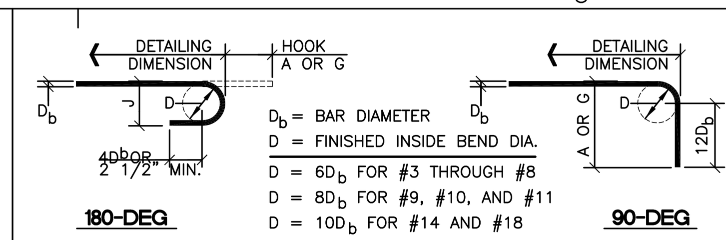

D_b = BAR DIAMETER
D = FINISHED INSIDE BEND DIA.
D = $6D_b$ FOR #3 THROUGH #8
D = $8D_b$ FOR #9, #10, AND #11
D = $10D_b$ FOR #14 AND #18

BAR SIZE	DIMENSION OF STANDARD 180–DEG HOOKS, ALL GRADES: A OR G	J	D	DIMENSION OF STANDARD 90–DEG HOOKS, ALL GRADES: A OR G	D
#3	5"	3"	2 1/4"	6"	2 1/4"
#4	6"	4"	3"	8"	3"
#5	7"	5"	3 3/4"	10"	3 3/4"
#6	8"	6"	4 1/2"	1'–0"	4 1/2"
#7	10"	7"	5 1/4"	1'–2"	5 1/4"
#8	11"	8"	6"	1'–4"	6"
#9	1'–3"	11 3/4"	9 1/2"	1'–7"	9 1/2"
#10	1'–5"	1'–1 1/4"	10 3/4"	1'–10"	10 3/4"
#11	1'–7"	1'–2 3/4"	12"	2'–0"	12"
#14	2'–3"	1'–9 3/4"	18 1/4"	2'–7"	18 1/4"
#18	3'–0"	2'–4 1/2"	24"	3'–5"	24"

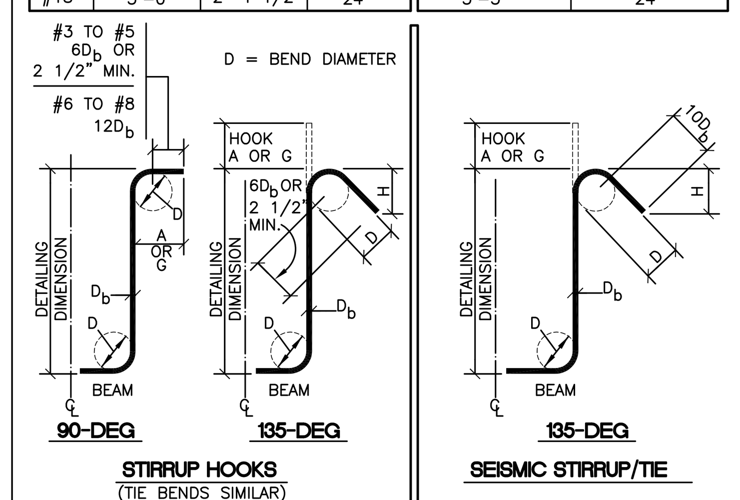

BAR SIZE	D	90°: A OR G	135°: A OR G	135°: APPROX. H
#3	1 1/2"	4"	4"	2 1/2"
#4	2"	4 1/2"	4 1/2"	3"
#5	2 1/2"	6"	5 1/2"	3 3/4"
#6	4 1/2"	1'–0"	8"	4 1/2"
#7	5 1/4"	1'–2"	9"	5 1/4"
#8	6"	1'–4"	10 1/2"	6"

SIZE	D	135° SEISMIC HOOK: A OR G	APPROX. H
#3	1 1/2"	5"	3 1/2"
#4	2"	6 1/2"	4 1/2"
#5	2 1/2"	8"	5 1/2"
#6	4 1/2"	11"	6 1/2"
#7	5 1/4"	1'–0 1/2"	7 3/4"
#8	6"	1'–2 1/2"	9"

NOTE:
1. ALL REINFORCEMENT SHALL BE BENT COLD, UNLESS OTHERWISE PERMITTED BY THE BUILDING OFFICIAL.
2. REINFORCEMENT PARTIALLY EMBEDDED IN CONCRETE SHALL NOT BE FIELD BENT, EXCEPT AS SHOWN ON THE DESIGN DRAWINGS OR PERMITTED BY THE BUILDING OFFICIAL.

SCALE: N.T.S.

STANDARD HOOK DETAILS — 9

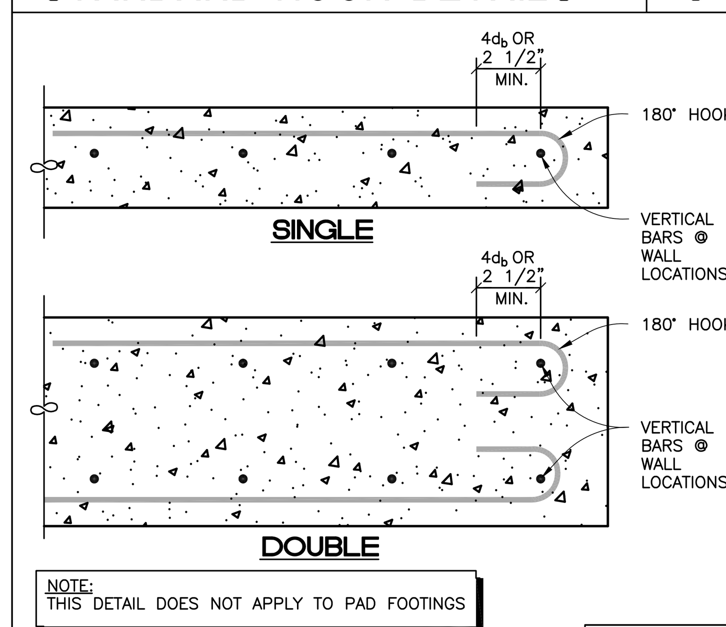

NOTE:
THIS DETAIL DOES NOT APPLY TO PAD FOOTINGS

SCALE: N.T.S.

TERMINATION OF CONC. — 10

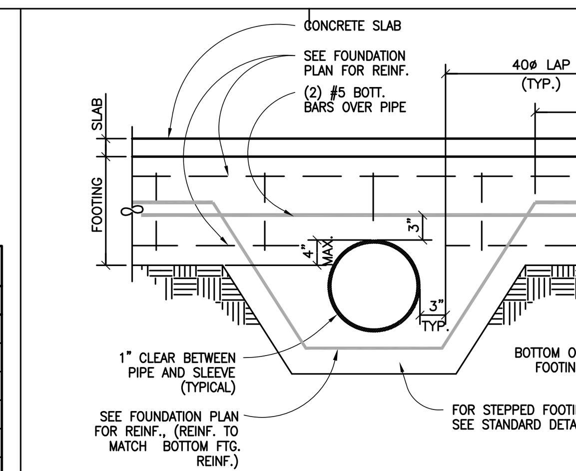

SCALE: N.T.S.

PIPE PENETRATION AT FOOTING — 5

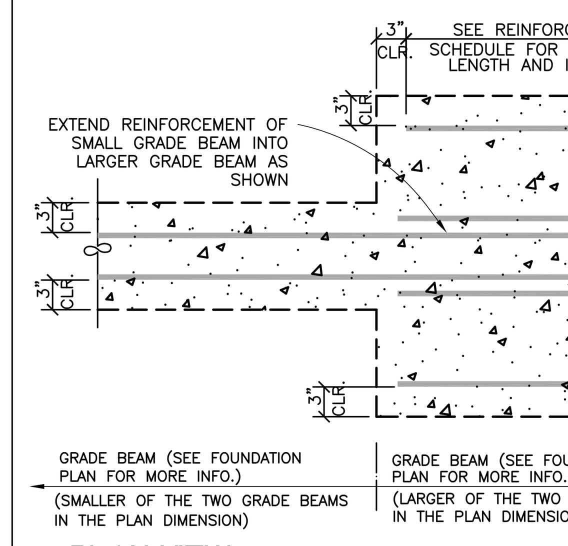

A PLAN VIEW

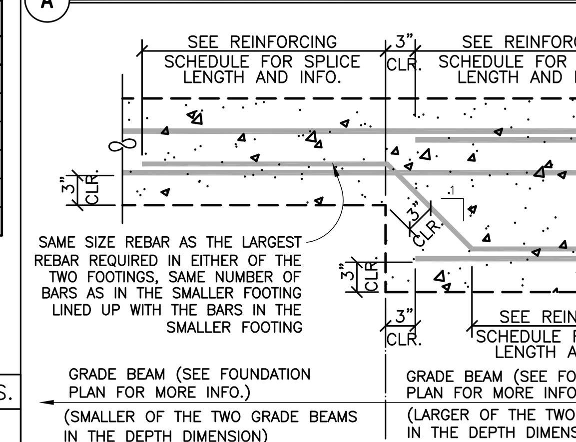

B SECTION

SCALE: N.T.S.

SPLICE AT DIFFERENT SIZE GRADE BEAMS — 6

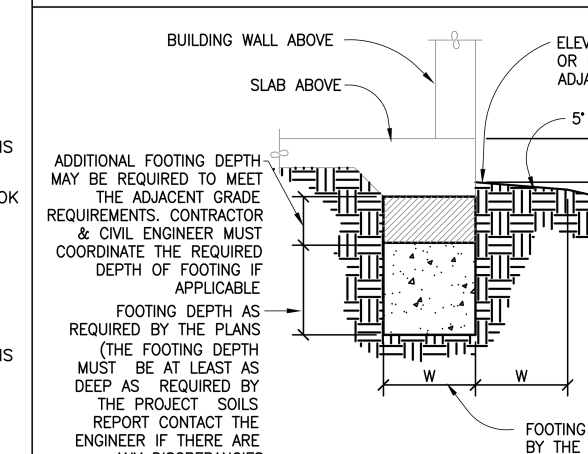

NOTE:
THIS DETAIL ADDRESSES ADJACENT GRADE LOCATIONS W/ RESPECT TO THE FOUNDATION. SEE THE FOUNDATION & CIVIL PLANS FOR MORE INFO. ALSO SEE "FOUNDATION NOTES" DETAIL FOR MORE INFO.

SCALE: N.T.S.

ADJACENT GRADES TO FTG. — 7

1. REINFORCEMENT SHALL BE DEFORMED REINFORCEMENT, EXCEPT THAT PLAIN REINFORCEMENT MAY BE USED FOR SPIRALS.
2. REINFORCEMENT SHALL CONFORM TO ASTM A 615, REINFORCING BARS FOR CONCRETE.
3. REINFORCING BARS SHALL HAVE THE FOLLOWING SPECIFIED YIELD STRENGTHS:
   a) NO. 3 AND SMALLER – 40.000 PSI (GRADE 40)
   b) NO. 4 AND LARGER – 60.000 PSI (GRADE 60)
   NOTE: A706 GRADE 60 MAY BE SUBSTITUTED FOR a) & b) REINFORCING.
4. WELDED SMOOTH WIRE FABRIC FOR CONCRETE REINFORCEMENT SHALL CONFORM TO ASTM 185. GRADE 65 FOR PLAIN WIRE AND ASTM A497 GRADE 75 FOR DEFORMED WIRE ALL LAPS TO BE AT LEAST TWO CROSS WIRES.
5. ALL WELDED REBAR SHALL BE ASTM A706.* U.N.O.
   * PREHEAT THE REBAR IF REQUIRED BY AWS (BASED ON THE CARBON CONTENT OF THE REBAR)
6. AT THE TIME CONCRETE IS PLACED, REINFORCEMENT SHALL BE FREE FROM MUD, OIL OR OTHER NONMETALLIC COATING THAT DECREASE BOND. EPOXY COATING OF BARS IN ACCORDANCE WITH ACI 318–11 SECTION 7.4 SHALL BE PERMITTED.
7. REINFORCEMENT, PRESTRESSING TENDONS AND DUCTS SHALL BE ACCURATELY PLACED AND ADEQUATELY SUPPORTED BEFORE CONCRETE IS PLACED, AND SHALL BE SECURED AGAINST DISPLACEMENT WITHIN TOLERANCES.
8. TOLERANCE FOR DEPTH d, AND MINIMUM CONCRETE COVER IN FLEXURAL MEMBERS, WALLS AND COMPRESSION MEMBERS SHALL BE AS FOLLOWS:

	TOLERANCE ON d	TOLERANCE ON MINIMUM CONCRETE COVER
d ≤ 8"	± 3/8"	– 3/8"
d > 8"	± 1/2"	– 1/2"

EXCEPT THAT TOLERANCE FOR THE CLEAR DISTANCE TO FORMED SOFFITS SHALL BE MINUS 1/4" (6.4 mm) AND TOLERANCE FOR COVER SHALL NOT EXCEED MINUS ONE THIRD THE MINIMUM CONCRETE COVER REQUIRED BY THE APPROVED PLANS OR SPECIFICATIONS.

9. TOLERANCE FOR LONGITUDINAL LOCATION OF BENDS AND ENDS OF REINFORCEMENT SHALL BE ±2" (±51 mm) EXCEPT AT DISCONTINUOUS ENDS OF MEMBERS WHERE TOLERANCE SHALL BE ±1/2" (±12.7 mm).
10. ALL DIMENSIONS SHOWN FOR LOCATION OF REINFORCING STEEL ARE TO FACE OF BAR AND DENOTE CLEAR COVERAGE. UNLESS SPECIFICALLY NOTED, CONCRETE COVERAGE SHALL BE AS FOLLOWS:

CONCRETE CAST AGAINST AND PERMANENTLY EXPOSED TO EARTH: ____ 3"
CONCRETE EXPOSED TO EARTH OR WEATHER: (NO. 6 THROUGH NO.18) ____ 2"
(NO. 5 AND SMALLER) ____ 1 1/2"

CONCRETE NOT EXPOSED TO WEATHER OR IN CONTACT WITH GROUND:
SLABS, WALLS AND JOISTS: (NO. 14 AND NO.18) ____ 1 1/2"
(NO. 11 AND SMALLER) ____ 3/4"
BEAMS AND COLUMNS: ____ 1 1/2"
SHELLS AND FOLDED PLATE MEMBERS: (NO. 6 THROUGH NO.18) ____ 3/4"
(NO. 5 AND SMALLER) ____ 1/2"

CONCRETE TILT–UP PANELS CAST AGAINST A RIGID HORIZONTAL SURFACE, SUCH AS A CONCRETE SLAB, EXPOSED TO THE WEATHER: (NO. 8 AND SMALLER) ____ 1
(NO. 9 THROUGH NO. 18) ____ 2

NOTES:
1. PLACE REINF. AT MID–THICKNESS FOR SLABS ON GROUND BUT MAINTAIN ABOVE CLEARANCES.
2. THE CONTRACTOR IS RESPONSIBLE FOR ADDING ADDITIONAL CONCRETE TO MEET THE ABOVE CLEARANCES & ALL OTHER CLEARANCES REQUIRED BY THESE PLANS AND AC1. TYP. @ ALL CONCRETE. CONTACT THE ENGINEER IF THERE ARE ANY QUESTIONS BEFORE BEGINING CONSTRUCTION & / OR FABRICATION.

11. ALL SPLICES IN CONTINUOUS REINFORCEMENT OR REINFORCING AS USED IN WALLS, FOOTINGS, ETC. SHALL BE AS SPECIFIED IN NOTE 14. VERIFY WALL BARS SHALL BE SPLICED AT OR NEAR FLOOR LINES. BARS MAY BE WIRED TOGETHER AT SPLICES OR LAPS EXCEPT FOR TOP REINF. OF BEAM AND SLABS, OR WHERE SPECIFICALLY DETAILED TO BE SEPARATED. ALL REINF. SPLICES OR LAP SPLICES SHALL BE LOCATED AS INDICATED ON THE PLANS IF SPLICE OR LAP LOCATIONS ARE NOT INDICATED ALL LAP & SPLICES SHALL BE STAGGERED 2'–0" O.C.
12. CONCRETE SHALL NOT BE DROPPED THROUGH REINF. STEEL (AS IN WALL) SO AS TO CAUSE SEGREGATION OF AGGREGATES. IN SUCH CASES, HOPPERS AND VERTICAL CHUTES OR TRUNKS SHALL BE USED. CHUTES OR TRUNKS SHALL BE OF VARIABLE LENGTHS SO THAT FREE UNCONFINED FALL OF CONCRETE SHALL NOT EXCEED FIVE (5) FEET AND SUFFICIENT NUMBER SHALL BE USED TO INSURE THE CONCRETE BEING LEVEL AT ALL TIMES.
13. REINFORCING BARS SHALL NOT BE RE–BENT WITHOUT APPROVAL OF ENGINEER. BENDS SHALL BE MADE COLD.
14. TYPICAL REINFORCEMENT SPLICES & EMBEDMENT LENGTH

REBAR SIZE	SPLICE LENGTH, INCHES	EMBEDMENT W/ HOOK	EMBEDMENT W/O HOOK
#3	24"	9"	21"
#4	32"	12"	27"
#5	40"	15"	33"
#6	48"	18"	38"
#7	69"	21"	53"
#8	78"	24"	59"
#9	88"	27"	65"
#10	98"	31"	73"
#11	108"	35"	81"

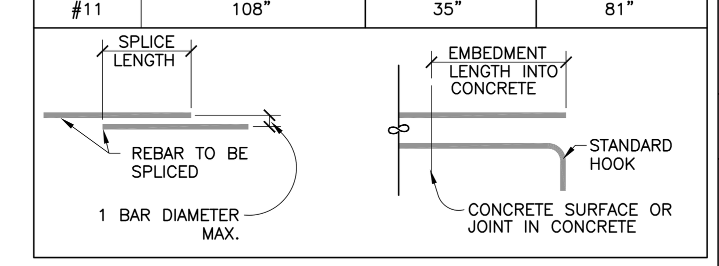

15. ALL REINFORCING SHALL BE DETAILED, FABRICATED AND PLACED, IN ACCORDANCE WITH THE LATEST ACI DETAILING MANUAL.
16. ALL REINFORCING SHALL BE SUPPORTED IN FORMS, SPACED WITH NECESSARY ACCESSORIES AND SHALL BE SECURELY WIRED TOGETHER, IN ACCORDANCE WITH THE LATEST EDITION OF THE CRSI " MANUAL OF STANDARD PRACTICE"

SCALE: N.T.S.

REINFORCING — 3

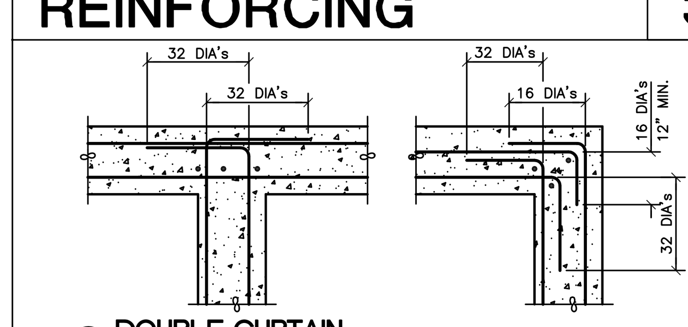

A DOUBLE CURTAIN

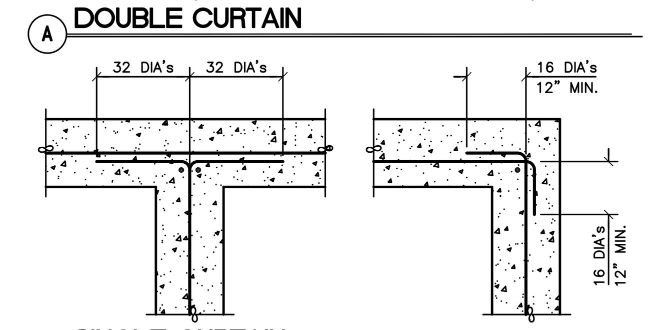

B SINGLE CURTAIN

SCALE: N.T.S.

REINF. LAPS AT CONC. — 4

FOR BID ONLY

1. ALL CONCRETE MATERIALS AND WORKMANSHIP SHALL CONFORM TO CHAPTER 19 OF THE 2012 INTERNATIONAL BUILDING CODE AND TO ALL REQUIREMENTS OF ACI 318–11, SPECIFICATIONS FOR STRUCTURAL CONCRETE FOR BUILDINGS, EXCEPT AS MODIFIED BY THE SUPPLEMENT REQUIRED BELOW.
2. MIX DESIGN REQUIREMENTS:
   a) CONCRETE MIX SHALL BE PLACED WITH THE FOLLOWING CEMENT TYPES. MAXIMUM WATER/CEMENT RATIOS, COMPRESSIVE STRENGTHS (f'c), AND MAXIMUM SIZE AGGREGATE. SULFATE EXPOSURE SHALL BE OBTAINED DIRECTLY BY THE CONTRACTOR FROM THE PROJECT'S SOILS ENGINEER AT THE TIME OF THE BUILDING PADS CONSTRUCTION

SULFATE EXPOSURE	WATER SOLUBLE SULFATE (SO_4) IN SOIL, % OF WEIGHT	SULFATE (SO_4) IN WATER PPM	CEMENT TYPE	MAXIMUM WATER/ CEMENT RATIO	MIN. CONCRETE STRENGTH f'c, PSI: SLAB ON GRADE	FOUND.
NEGLIGIBLE	0.00 ⩽ SO_4 ⩽ 0.10	0 ⩽ SO_4 < 150	II	0.45	4500	4500
MAXIMUM SIZE AGGREGATE					1 1/2"	1 1/2"

   b) CONCRETE SLUMP SHALL BE DESIGNED TO 4". ALL CONCRETE WITH SLUMPS IN EXCESS OF 5" SHALL BE REJECTED AND NOT USED.
   c) THE CONCRETE SUPPLIER MUST BEAR THE TOTAL RESPONSIBILITY THAT THE MIX DESIGNS WILL ATTAIN THE REQUIRED STRENGTH AND SHRINKAGE CHARACTERISTICS. ACCEPTANCE OF MIX DESIGN WILL BE BASED ONLY ON CONFORMANCE OF SPECIFIED DESIGN STRENGTH AND DESIGN SLUMP.
3. PIPE MAY PASS THROUGH STRUCTURAL CONCRETE IN SLEEVES, BUT SHALL NOT BE EMBEDDED THEREIN. SLEEVES SHALL BE WRAPPED WITH EXPANSION JOINT FILLER MATERIAL TO ALLOW CONCRETE TO CURE WITHOUT RESTRAINT. PIPES OR CONDUITS EXCEEDING ONE–THIRD THE SLAB OR WALL THICKNESS SHALL NOT BE IN STRUCTURAL CONCRETE UNLESS SPECIFICALLY DETAILED SEE MECHANICAL AND/OR ELECTRICAL DRAWINGS FOR LOCATION OF SLEEVES, ACCESSORIES, ETC.
4. ALL REINFORCING STEEL, WIRE MESH, ANCHOR BOLTS, HOLDOWN ANCHORS, AND OTHER INSERTS SHALL BE SECURED IN POSITION AND INSPECTED BY THE BUILDING OFFICIAL PRIOR TO PLACING CONCRETE.
5. LOCATION OF CONSTRUCTION OR POUR JOINTS NOT SPECIFIED IN THESE DRAWINGS MUST BE REVIEWED BY THE ENGINEER.
6. REFER TO ARCHITECTURAL DRAWINGS FOR MOLDS, GROOVES, ORNAMENTS, OR ACCESSORIES REQUIRED TO BE CAST IN CONCRETE, AND FOR LOCATIONS OF FLOOR FINISHES AND SLAB DEPRESSIONS.
7. HORIZONTAL CONSTRUCTION JOINTS SHALL HAVE ENTIRE SURFACE REMOVED TO EXPOSED CLEAN AGGREGATE SOLIDLY EMBEDDED.
8. THE CONTRACTOR SHALL FURNISH AND INSTALL 1/2" PRE–MOLDED EXPANSION JOINTS IN ALL EXTERIOR WALKS AND SLABS AS INDICATED ON DRAWINGS, BUT IN NO CASE MORE THAN 24'–0" O.C., VERIFY WITH ARCH. & CIVIL DWG'S.
9. FOUNDATION PLATES OR SILLS SHALL BE BOLTED TO THE FOUNDATION OR FOUNDATION WALL WITH NOT LESS THAN 5/8" NOMINAL DIAMETER STEEL ANCHOR BOLTS EMBEDED AT LEAST 7" INTO THE CONCRETE OR MASONRY AND SPACED NOT MORE THAN 4' APART. THERE SHALL BE A MINIMUM OF TWO BOLTS PER PIECE WITH ONE BOLT LOCATED WITHIN 12" OF EACH END OF EACH PIECE NOT CLOSER THAN 7 BOLT DIA. FROM THE END OF EACH PIECE. A NUT AND 3x3x0.229 PLATE WASHER SHALL BE TIGHTENED ON EACH BOLT TO THE PLATE.
10. WATER USED IN MIXING CONCRETE SHALL BE CLEAN AND FREE FROM INJURIOUS AMOUNTS OF OILS, ACIDS, ALKALIS, SALTS, ORGANIC MATERIALS OR OTHER SUBSTANCES THAT MAY BE DELETERIOUS TO CONCRETE OR REINFORCEMENT. NONPOTABLE WATER SHALL NOT BE USED IN CONCRETE.
11. CONCRETE SHALL BE DEPOSITED AS NEARLY AS PRACTICABLE IN ITS FINAL POSITION TO AVOID SEGREGATION DUE TO REHANDLING OR FLOWING. CONCRETE SHALL BE CARRIED ON AT SUCH A RATE THAT CONCRETE IS AT ALL TIMES PLASTIC AND FLOWS READILY INTO SPACES BETWEEN REINFORCEMENT CONCRETE THAT HAS PARTIALLY HARDENED OR BEEN CONTAMINATED BY FOREIGN MATERIAL SHALL NOT BE DEPOSITED IN THE STRUCTURE.
12. ADDITIVES AND ADMIXTURES TO CONCRETE SHALL NOT BE USED UNLESS APPROVED BY THE ENGINEER OF RECORD.
13. THE EXTERIOR FLATWORK SHOULD BE POURED SEPARATELY IN ORDER TO ACT INDEPENDENTLY OF THE WALLS AND FOUNDATION SYSTEM. SEE CIVIL / ARCH. PLANS FOR EXTERIOR FLATWORK INFO.
14. FOOTINGS SHALL BE LOCATED ON CENTER LINE OF WALL, PILASTER, OR COLUMN UNLESS OTHERWISE NOTED.
15. AGGREGATES SHALL CONFORM TO ASTM C33.
16. CONCRETE MIXES SHALL BE DESIGNED BY A TESTING LABORATORY APPROVED BY THE ENGINEER. MIXES SHALL CONFORM TO APPLICABLE BUILDING CODE REQUIREMENTS, REGARDLESS OF OTHER MINIMUM REQUIREMENTS SPECIFIED HEREIN OR ON THE DRAWINGS. MIX DESIGNS SHALL BE SUBMITTED TO THE ENGINEER FOR APPROVAL BEFORE USE. DESIGNS SHALL SHOW PROPORTIONS OF CEMENT, FINE AND COARSE AGGREGATES AND WATER, AND GRADATION OF COMBINED AGGREGATES.
17. PROVIDE 3/4" CHAMFER AT EXPOSED EDGES OF CONCRETE, UNLESS OTHERWISE SHOWN.
18. SECURE REINFORCING, ANCHOR BOLTS, INSERTS, ETC. RIGIDLY IN PLACE PRIOR TO POURING CONCRETE.
19. SUPPORT HORIZONTAL REINFORCING ON GALVANIZED CHAIRS EXCEPT MORTAR BLOCKS OR OTHER APPROVED METHOD OF SUPPORT AT FOOTINGS, AND SLABS ON GRADE. NOTE THAT BRACING AND LIFT INSERTS, AND CHAIRS AT TILT–UP PANELS, NEED NOT BE GALVANIZED BUT SHALL HAVE PLASTIC TIPS.
20. REMOVE FORMS AT FOLLOWING MINIMUM TIMES AFTER POURING: AT SLAB EDGES – 24 HOURS; AT WALLS LESS THAN 4' HIGH – 36 HOURS.
21. CONSTRUCT FORMWORK TO MAINTAIN TOLERANCE AS OUTLINED IN ACI 347. FORMWORK SHALL BE REUSED IN ACCORDANCE WITH ACI 347.
22. TRENCHING OF GRADE BEAMS SHALL BE EXCAVATED IN ORDER TO PROVIDE THE BEAM CROSS SECTION INDICATED. BEAM AND SLAB DEPTHS AND WIDTHS AS INDICATED ARE MINUMUM ACCEPTABLE SIZES. LARGER SIZE BEAMS AND SLABS FORMED BY LESS ACCURATE TRENCHING MAY REQUIRE ADDITIONAL REINFORCING NOT SHOWN WHICH SHALL BE DETERMINED BY THE ENGINEER DURING CONSTRUCTION REVIEW. ALL LOOSE DIRT FROM SIDES AND BOTTOMS OF TRENCHES SHALL BE REMOVED. HAUNCHES SHALL BE CUT ON EACH SIED OF TRENCHS OF ADEQUATE SIZE TO MAINTAIN THE VERTICAL SIDES OF THE TRENCH.

CONCRETE NOTES — 1

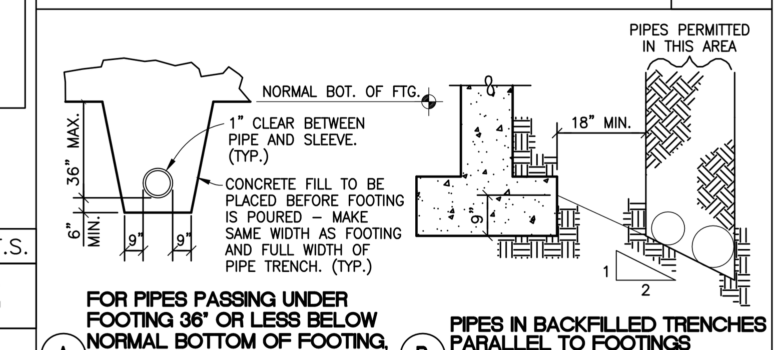

A FOR PIPES PASSING UNDER FOOTING 36" OR LESS BELOW NORMAL BOTTOM OF FOOTING.
B PIPES IN BACKFILLED TRENCHES PARALLEL TO FOOTINGS

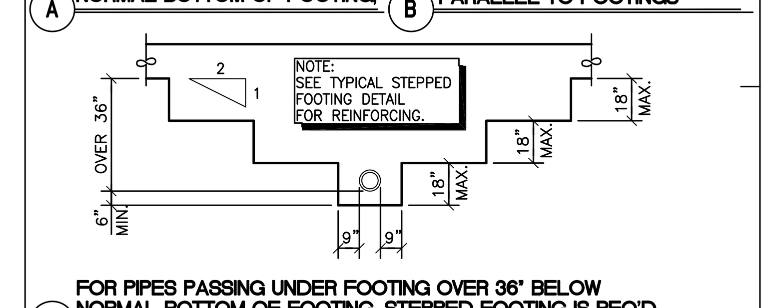

C FOR PIPES PASSING UNDER FOOTING OVER 36" BELOW NORMAL BOTTOM OF FOOTING, STEPPED FOOTING IS REQ'D.

SCALE: N.T.S.

RELATIONSHIP OF PIPES — 2

GreenbergFarrow
1430 W. Peachtree St., Suite 200
Atlanta, GA 30309
t: 404 601 4000 f: 404 601 3980

COPYRIGHT NOTICE
This drawing is the property of the above referenced Professional and is not to be used for any purpose other than the specific project and site named herein, and cannot be reproduced in any manner without the express written permission from the Professional

ISSUE/REVISION RECORD

DATE	DESCRIPTION
01/19/15	PERMIT SET

BARRY LEVIN & ASSOCIATES
STRUCTURAL ENGINEERS
301 PERIMETER CENTER NORTH
SUITE 100 ATLANTA, GEORGIA 30346
PHONE 770-457-2376 FAX 770-457-0514
WWW.BARRYLEVIN.COM

PROFESSIONAL SEAL
COLORADO REGISTERED BARRY LEVIN 29311 PROFESSIONAL ENGINEER
JAN 1 9 2015

PROFESSIONAL IN CHARGE
B LEVIN
PROJECT MANAGER
R NEW
QUALITY CONTROL
R NEW
DRAWN BY
J MITCHELL

PROJECT NAME
CIRCLE K STORES, INC.

COLORADO SPRINGS COLORADO

E. FOUNTAIN BLVD & ACADEMY PARK LOOP

CIRCLE K STORES INC.

PROJECT NUMBER
2014–066

SHEET TITLE
TYPICAL SECTIONS & DETAILS

SHEET NUMBER
S1.2-CS