CIRCLE K SOUTHWEST PROTOTYPE 4480 - 08/13/2013

STANDARD REBAR HOOKS (12) — SCALE 3/4"=1'-0"

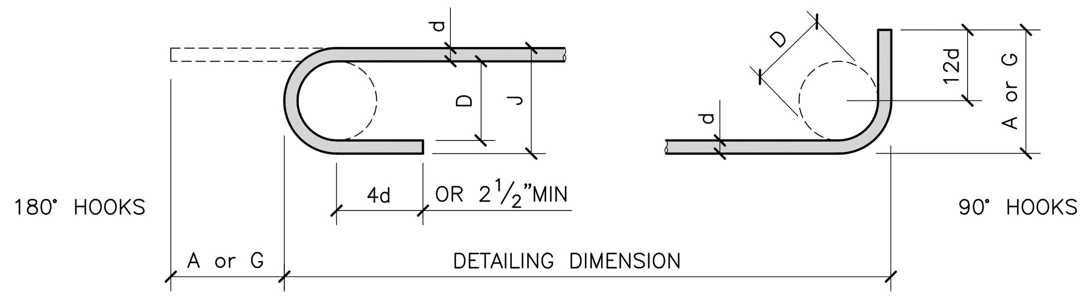

END HOOKS, ALL GRADES				
BAR SIZE, d	FINESHED BEND DIAM., D	180° HOOKS		90° HOOKS
		A or G	J	A or G
#3	2 1/4"	5"	3"	6"
#4	3"	6"	4"	8"
#5	3 3/4"	7"	5"	10"
#6	4 1/2"	8"	6"	1'-0"
#7	5 1/4"	10"	7"	1'-2"
#8	6"	11"	8"	1'-4"
#9	9 1/2"	1'-3"	11 3/4"	1'-7"
#10	10 3/4"	1'-5"	1'-1 1/4"	1'-10"
#11	12"	1'-7"	1'-2 3/4"	2'-0"
#14	18 1/4"	2'-3"	1'-9 3/4"	2'-7"
#18	24"	3'-0"	2'-4 1/2"	3'-5"

'd'= NOMINAL DIAMETR OF BAR.

ADHESIVE ANCHORS IN CONCRETE (9) — SCALE 1"=1'-0"

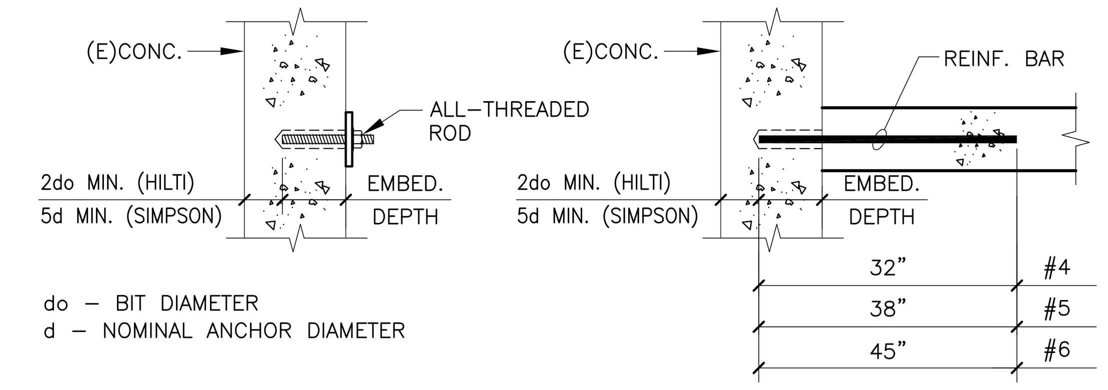

do – BIT DIAMETER
d – NOMINAL ANCHOR DIAMETER

ANCHORING SYSTEM WITH EPOXY ADHESIVE ANCHORS						
REBAR OR ANCHOR SIZE	HILTI HIT-HY 200 , ESR-3187, LARR-25964					
	SIMPSON SET-XP, ESR-2508, LARR-25744					
	EFFECTIVE EMBEDMENT DEPTH, U.N.O.	MAX. EMBED. DEPTH	MINIMUM CONC. THICKNESS		MINIMUM ANCHOR SPACING	MINIMUM EDGE DISTANCE
			HILTI	SIMPSON		
#3 OR 3/8"ø	3 3/8"	7 1/2"	5"	5 1/4"	2"	2"
#4 OR 1/2"ø	4 1/2"	10"	6"	7"	2 1/2"	2 1/2"
#5 OR 5/8"ø	6"	12 1/2"	7 1/2"	9 1/4"	3 1/2"	3 1/2"
#6 OR 3/4"ø	6 3/4"	15"	9 1/2"	10 1/2"	4"	4"

NOTES:
1. MATERIALS:
   NORMAL* WEIGHT CONCRETE f'c=3000 PSI (MIN.)
   REINFORCING BAR – ASTM A615, GRADE 60
   THREADED ROD – ASTM F593 CW1 AND/OR ASTM A193 GRADE B6,8 STAINLESS STEEL,
   ASTM A193 GRADE B7 AND/OR F1554 GRADE 36 CARBON STEEL
2. ADJUST LOCATION OF REBAR/ANCHORS AS REQUIRED TO AVOID EXISTING REINFORCEMENT WHERE ALLOWED PER DETAILS.
3. FOR INTERIOR OR EXTERIOR APPLICATION CONFORM TO MANUFACTURER'S RECOMMENDATIONS.
4. INSTALL ANCHORS PER MANUFACTURER'S PRINTED INSTALLATION INSTRUCTIONS.
5. SPECIAL INSPECTION SHALL BE PROVIDED DURING ROD OR REBAR INSTALLATION.

DETAIL (6) — SCALE 1 1/2"=1'-0"

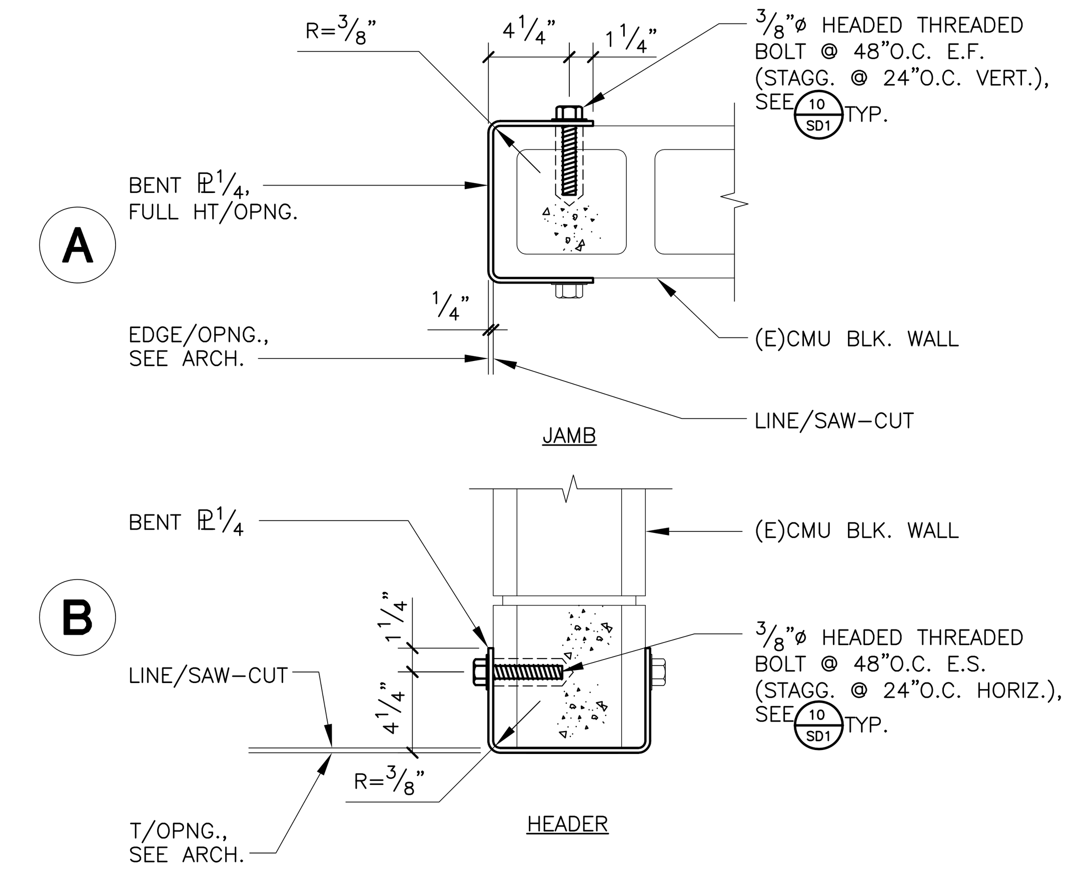

NOTE:
1. CONTRACTOR TO FIELD VERIFY GROUTED CELLS AND INSTALL ANCHORS ACCORDINGLY. IN CONDITIONS WHERE EXISTING CELL IN NOT GROUTED PROVIDE SOLID GROUT (1800 PSI) AT ADJACENT CELLS EA. SIDE AND TOP & BOTTOM (MIN. 2'-0" EA. DIRECTION).

JOINT DETAIL (3) — SCALE N.T.S.

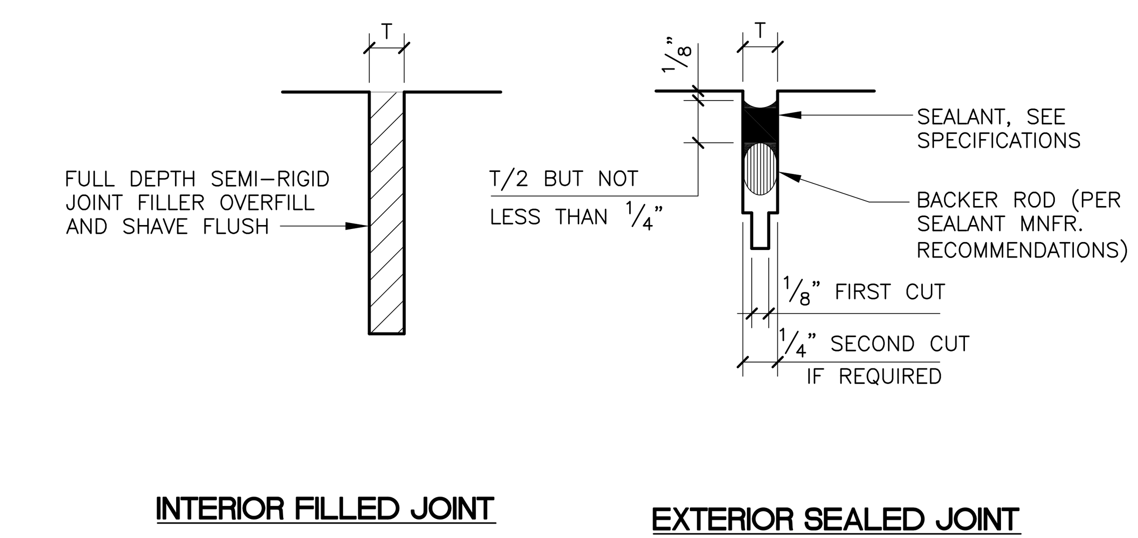

BAR EMBED./SPLICE SCHED. (11) — SCALE N.T.S.

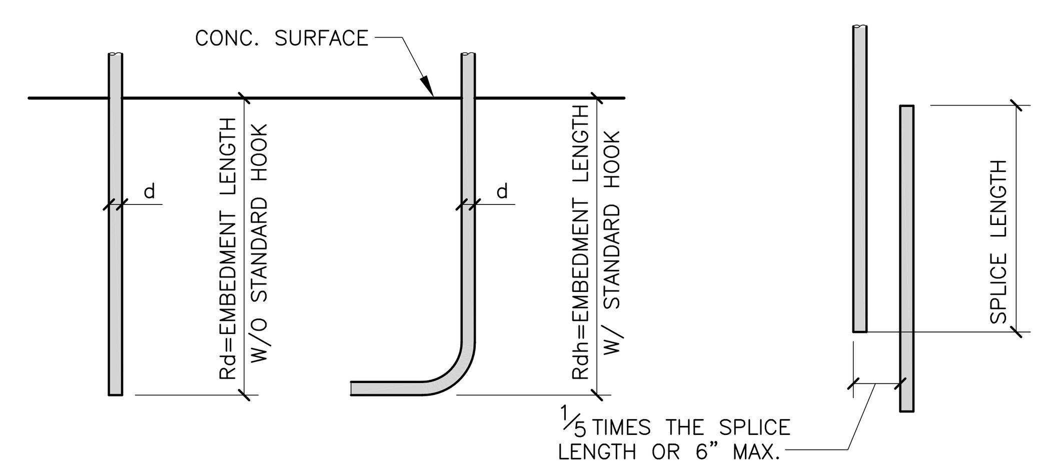

BAR SCHEDULE (GRADE 60) fc'=3000 PSI

BAR SIZE, d	EMDEDMENT (MIN)		SPLICE LENGTH
	WITHOUT HOOK	WITH HOOK	
#3	1'-9"	9"	2'-3"
#4	2'-3"	11"	2'-11"
#5	2'-9"	1'-2"	3'-6"
#6	3'-2"	1'-5"	4'-0"
#7	4'-5"	1'-8"	5'-9"
#8	4'-11"	1'-10"	6'-5"
#9	5'-4"	2'-1"	6'-11"
#10	5'-10"	2'-4"	7'-7"

BAR SCHEDULE (GRADE 60) fc'=4000 PSI

BAR SIZE, d	EMDEDMENT (MIN)		SPLICE LENGTH
	WITHOUT HOOK	WITH HOOK	
#3	1'-9"	8"	2'-3"
#4	2'-3"	10"	2'-11"
#5	2'-0"	1'-0"	2'-6"
#6	2'-9"	1'-3"	3'-6"
#7	3'-6"	1'-5"	4'-6"
#8	4'-0"	1'-7"	5'-3"
#9	4'-6"	1'-10"	6'-0"
#10	5'-0"	2'-1"	6'-6"

NOTE: BASIC DEVELOPMENT LENGTH & SPLICE COMPUTED FOR UNCOATED DEFORMED BARS.

FOOTING CONST. JOINT (8) — SCALE 1"=1'-0"

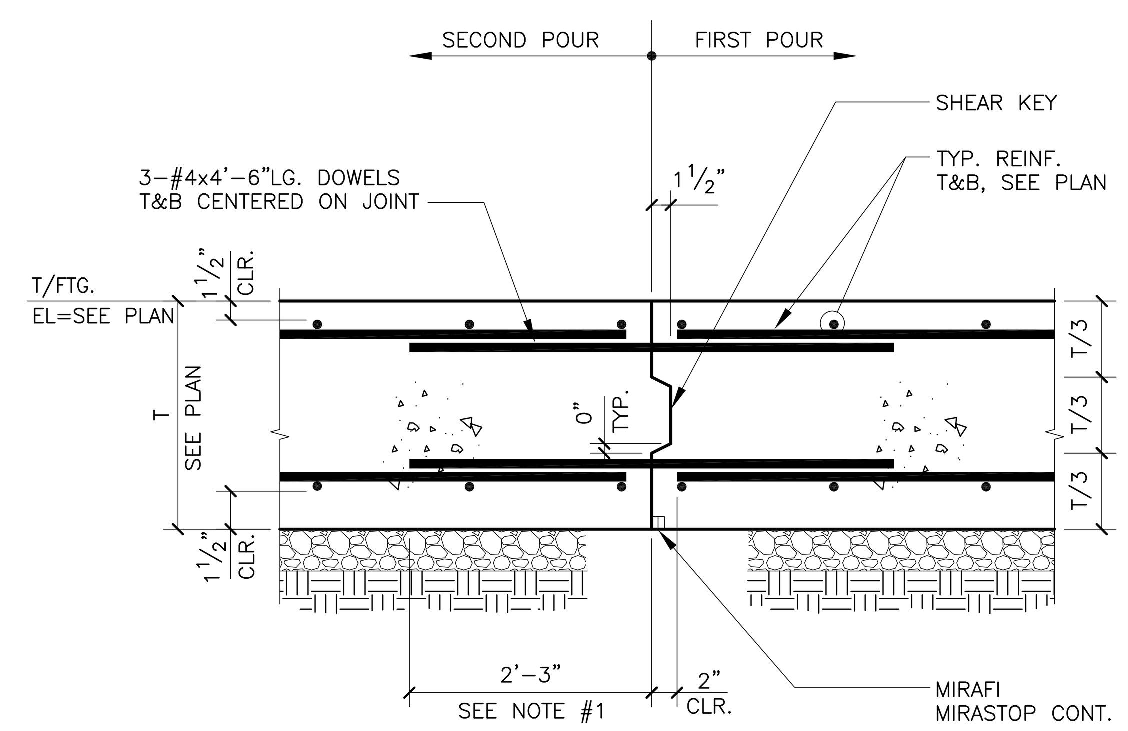

NOTE:
1. OMIT DOWELS WHERE TYPICAL REINFORCEMENT EXTENDS INTO SECOND POUR.

PIPES PERP. TO FTG. (5) — SCALE 3/4"=1'-0"

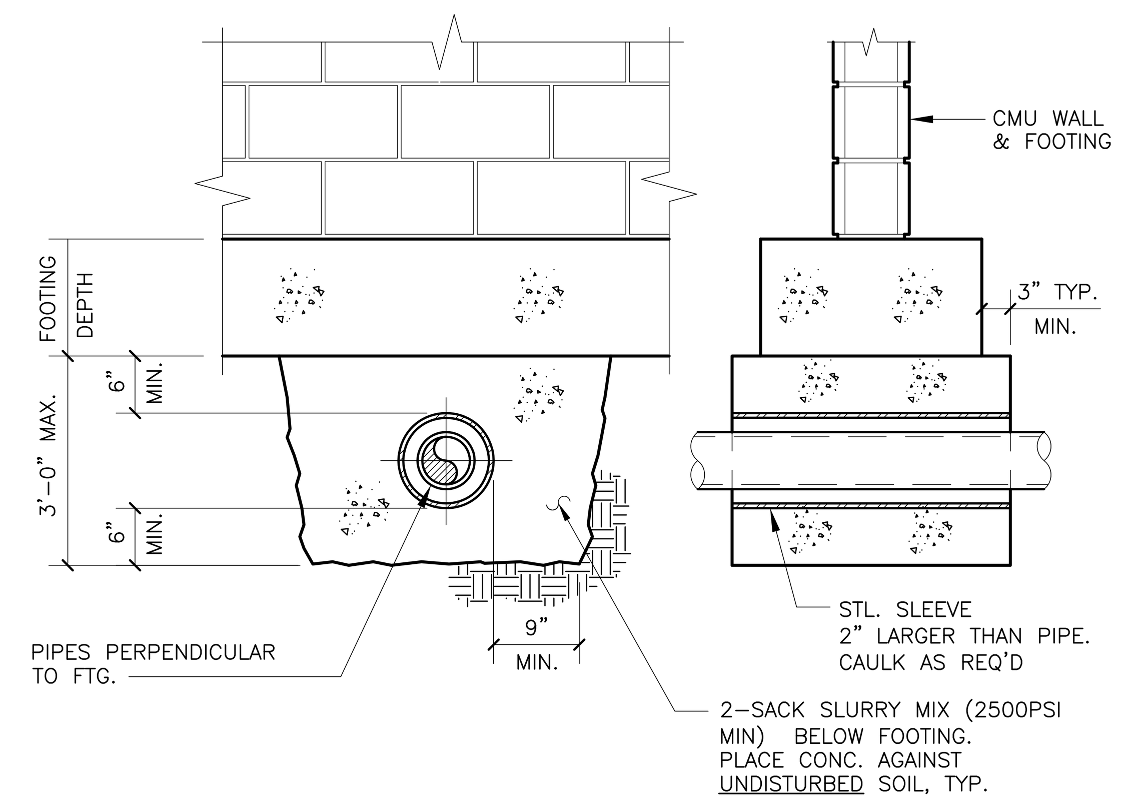

NOTES:
1. NO PIPES TO PENETRATE THRU FOOTING.
2. WHERE PIPES DO OCCUR AT FOOTING ELEVATION, STEP FOOTING DOWN SO PIPES PASS THROUGH FOOTING WALL, SEE 26/S1.2
3. MAX PIPE DIAMETER SHALL BE 6 INCHES

TYP. SLAB CONTROL JOINT (2) — SCALE 3/4"=1'-0"

FOR BID ONLY

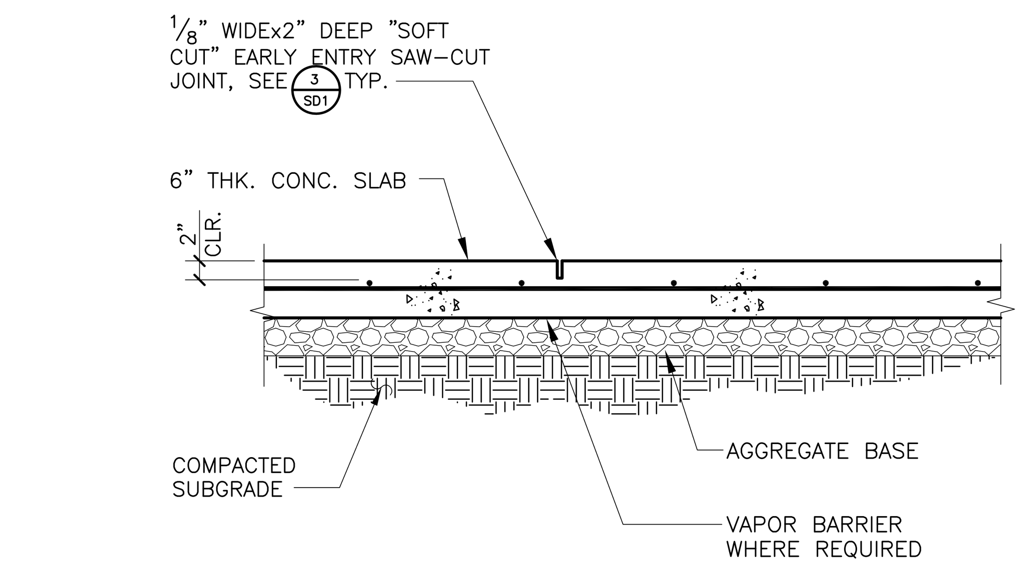

NOTES:
1. SPACE CONTROL JOINTS AT 20'-0"O.C. MAX.
2. SLAB CUTTING PERMITTED THE SAME DAY OF THE POUR.
3. JOINT FILLER SHALL BE PLACED IN CLEAN JOINTS OVER FILLED AND SHAVED FLUSH.

TYP. EPOXY ADHESIVE ANCHORS IN CMU (10) — SCALE 1 1/2"=1'-0"

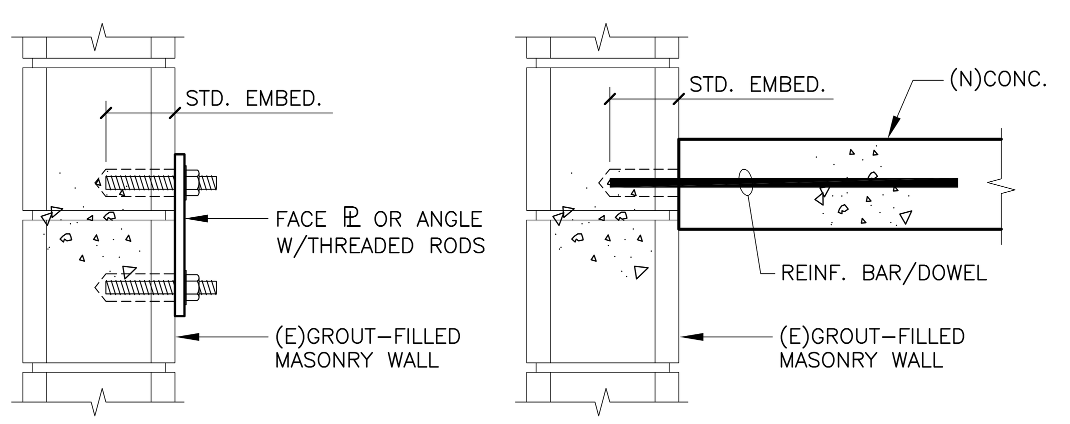

ANCHORING SYSTEM WITH EPOXY ADHESIVE ANCHORS					
REBAR OR ANCHOR SIZE	HILTI HIT-HY 70, ESR-2682				
	SIMPSON EPOXY-TIE SET-XP ER-26579				
	EMBEDMENT DEPTH	MINIMUM WALL THICKNESS	MINIMUM ANCHOR SPACING	MINIMUM EDGE DISTANCE	REMARK
#3 OR 3/8"ø	3 3/8"	8"	8"	4"	ANCHOR MUST NOT BE INSTALLED IN OR WITHIN 1 1/2" OF A HEAD JOINT.
#4 OR 1/2"ø	4 1/2"	8"	8"	4"	
#5 OR 5/8"ø	5 5/8"	8"	8"	4"	
3/4"ø	6 1/2"	8"	8"	4"	

NOTES:
1. MATERIALS:
   (E)GROUT-FILLED CMU WALL f'm=1500 PSI
   REINFORCING BAR – ASTM A615, GRADE 60
   THREADED ROD – ASTM A36, ASTM A307 CARBON STEEL
   – ASTM F593 CONDITION CW STAINLESS STEEL
2. ADJUST LOCATION OF REBAR/ANCHORS AS REQUIRED TO AVOID EXISTING REINFORCEMENT.
3. CONTRACTOR TO FIELD VERIFY GROUTED CELLS AND INSTALL ANCHORS ACCORDINGLY. IN CONDITIONS WHERE EXISTING CELL IN NOT GROUTED PROVIDE SOLID GROUT (2000 PSI) AT ADJACENT CELLS EA. SIDE AND TOP & BOTTOM (MIN. 2'-0" EA. DIRECTION).
4. INSTALL ANCHORS PER MANUFACTURER'S PRINTED INSTALLATION INSTRUCTIONS.
5. SPECIAL INSPECTION SHALL BE PROVIDED DURING ROD OR REBAR INSTALLATION.

CONC FTG. REINF. (7) — SCALE 3/4"=1'-0"

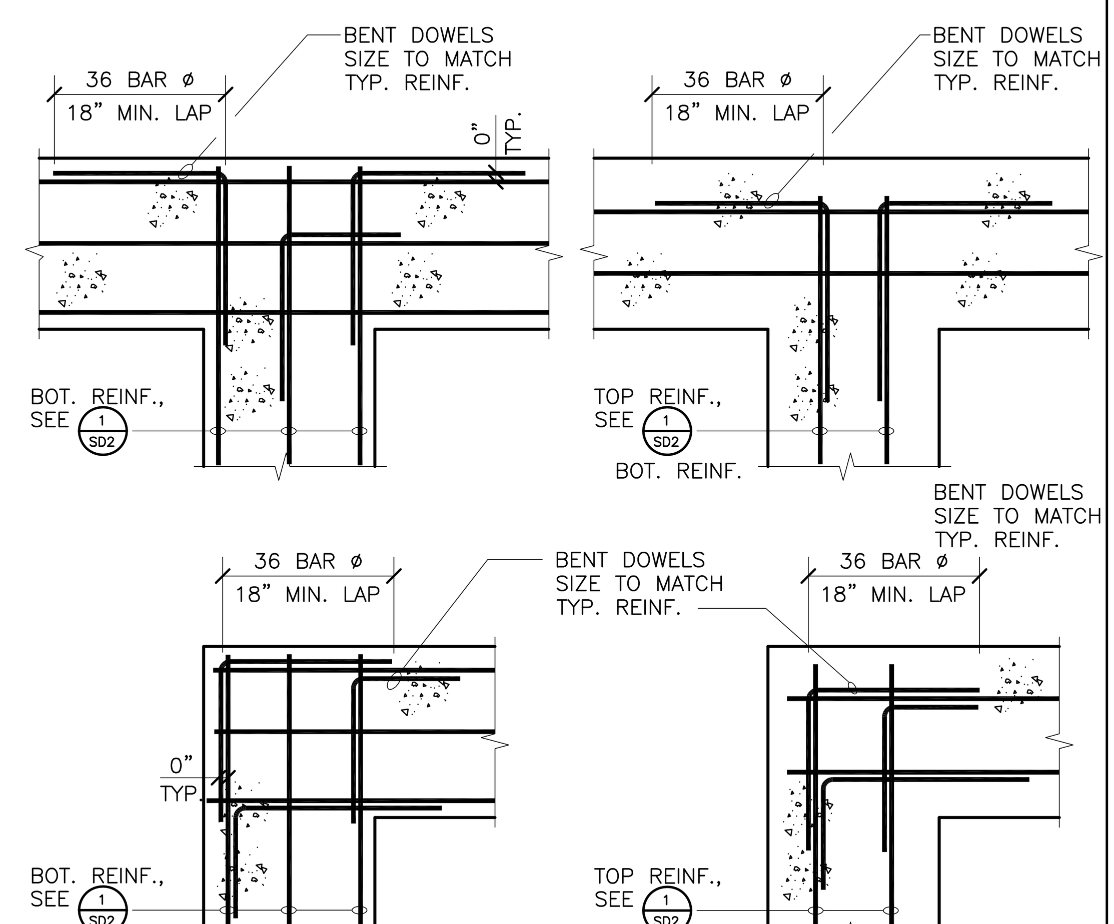

PIPES PARALLEL TO FTG. (4) — SCALE 3/4"=1'-0"

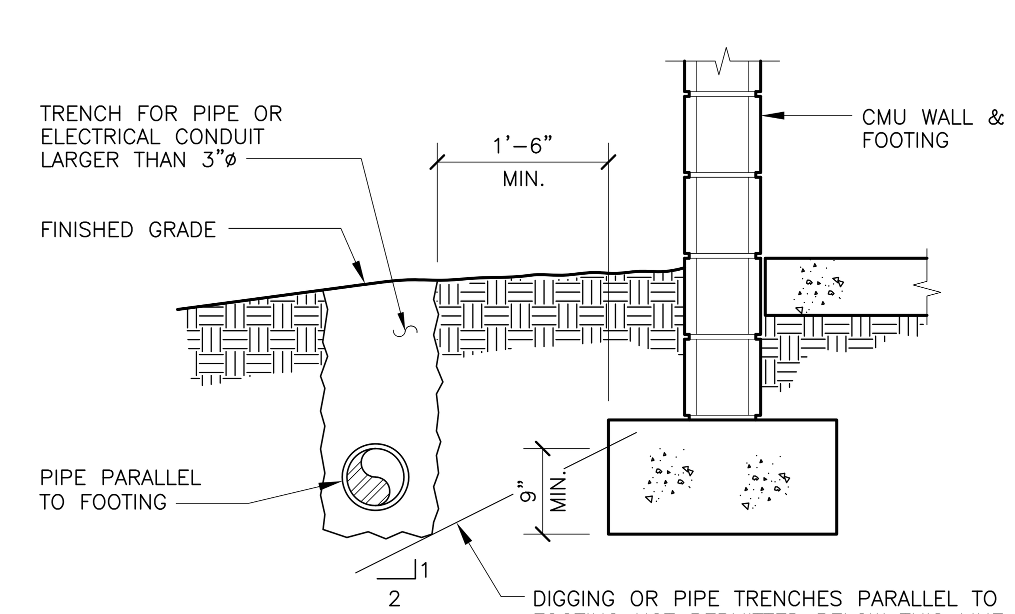

TYP. CONSTRUCTION JOINT (1) — SCALE 3/4"=1'-0"

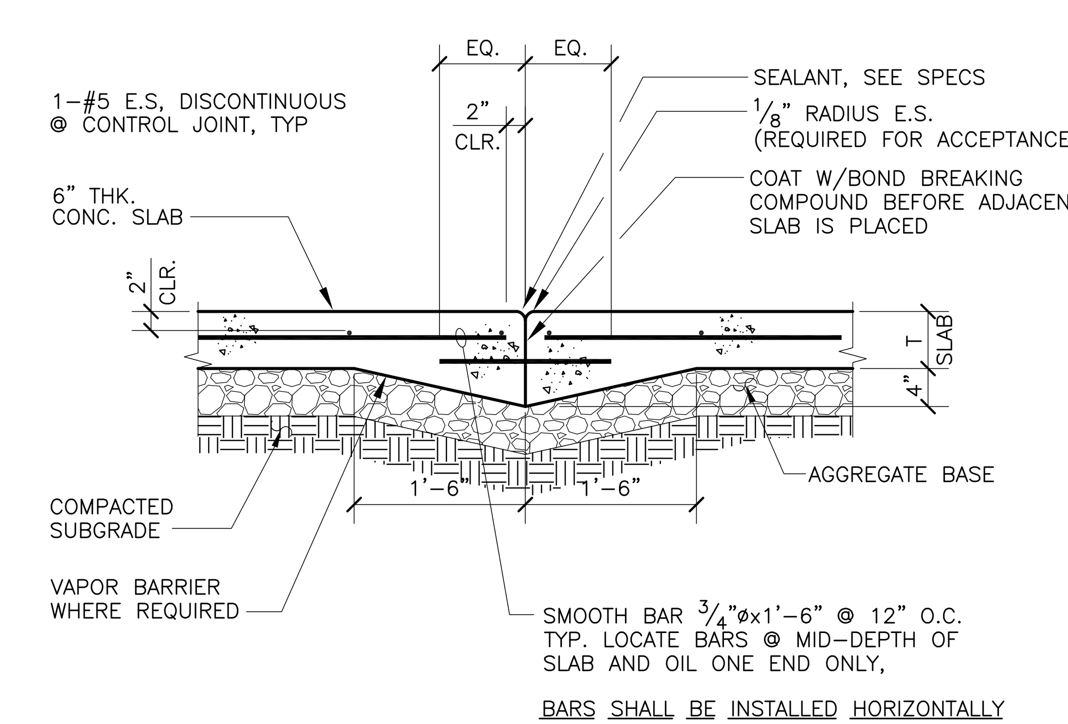

GreenbergFarrow
1430 W. Peachtree St., Suite 200
Atlanta, GA 30309
t: 404 601 4000 f: 404 601 3980

COPYRIGHT NOTICE
This drawing is the property of the above referenced Professional and is not to be used for any purpose other than the specific project and site named herein, and cannot be reproduced in any manner without the express written permission from the Professional

ISSUE/REVISION RECORD

DATE	DESCRIPTION
01/19/15	PERMIT SET

BARRY LEVIN & ASSOCIATES
STRUCTURAL ENGINEERS
301 PERIMETER CENTER NORTH SUITE 100 ATLANTA, GEORGIA 30346
PHONE 770-457-2376 FAX 770-457-0514
WWW.BARRYLEVIN.COM

REUSE OF THIS DRAWING IN ANY MANNER IS STRICTLY PROHIBITED WITHOUT THE WRITTEN APPROVAL OF BARRY LEVIN & ASSOCIATES, INC.

PROFESSIONAL SEAL
COLORADO REGISTERED PROFESSIONAL ENGINEER BARRY LEVIN 29311 JAN 1 9 2015

PROFESSIONAL IN CHARGE
B LEVIN
PROJECT MANAGER
R NEW
QUALITY CONTROL
R NEW
DRAWN BY
FA

PROJECT NAME
CIRCLE K STORES, INC. CAR WASH
COLORADO SPRINGS COLORADO
E. FOUNTAIN BLVD & ACADEMY PARK LOOP

CIRCLE K STORES INC.

PROJECT NUMBER
2014-066

SHEET TITLE
SECTIONS AND DETAILS

SHEET NUMBER
SD1-CW

Drawing Name: C:\Vault Workspace\GA\2014-000\2014-066 Circle K - Colorado Springs, CO\05Structural (BLA Generated)\00Drawings\Carwash\2014-066 Circle K Colorado Springs, CO - Carwash - SD1.dwg Last Modified: Dec 18, 2014 - 3:15pm Plotted on: Jan 19, 2015 - 10:56am by jmitchell