CIRCLE K SOUTHWEST PROTOTYPE 4480 – 08/13/2013

Firestone Building Products Company
FIRESTONE ROOFING SYSTEMS

SECTION 07540

MECHANICALLY ATTACHED THERMOPLASTIC OLEFIN (TPO) ROOFING SYSTEM

PART 1 GENERAL

1.01 GENERAL NOTES
A. Preceding job start up, contractor shall decide to his satisfaction that all specifications contained herein are workable.
B. Contractor will perform all work by competent, trained, and properly equipped personnel in strict accordance with good roofing practices and applicable industry standards.
C. Contractor will observe all published safety prevention policies and practices relating to application of roofing system and related work. All federal, state, and local codes shall be followed.
D. Contractor will follow application, safety, etc. information as published in the most current edition of the Manufacturers TPO Roofing System Technical Specification.
1.02 WORK INCLUDED
A. Work under this section covers the installation of a new MECHANICALLY ATTACHED FIRESTONE TPO roofing system. In addition contractor shall include all related items of work as noted herein or indicated on the drawings or otherwise required to complete the specified elements of work and provide the necessary warranties for this work.
B. Contractor will dispose of all materials properly. Any material removal shall comply with state and local codes and requirements and shall be disposed of in a legal manner.
C. If replacing an existing roof system, contractor shall remove the existing roof down to the roof deck. Contractor will dispose of all materials properly. Any asbestos removal shall comply with state and local codes and requirements and shall be disposed of in a legal manner.
1.03 SECTION INCLUDES
A. Substrate preparation
B. Membrane installation
C. Membrane flashing installation
1.04 RELATED SECTIONS

1.05 DEFINITIONS
A. American Society for Testing and Materials (ASTM)
1.06 SYSTEM DESCRIPTION
A. Reinforced TERMOPLASTIC OLEFIN sheet roofing, laid loosely over acceptable substrate and held in place with mechanically anchored Barbed Seam Plates
1.07 SUBMITTALS
A. Product Data: Firestone TPO Technical Information Sheet including all accessory components.
B. Samples: Firestone UltraPly TPO 80mil
C. Application Information: Firestone Mechanically Attached Application Guidelines
1.08 QUALIFICATIONS
A. Manufacturer:
1. Company providing a no dollar limit, single source roof system warranty that is backed by corporate assets in excess of one billion dollars.
2. System supplier must have ISO 9002 certification.
B. Applicator:
Shall be a Manufacturers No Dollar Limit (NDL) Licensed Contractor.
Shall have a fully staffed office within 100 miles of the job site.
Shall have at least five years experience in installing heat welded system.
1.09 REGULATORY REQUIREMENTS
A. Conform to applicable local building code requirements.
B. Underwriters Laboratories, Inc. (UL): Class A Fire Hazard Classification.
C. Factory Mutual Corporation (FM): Roof Assembly Classification, FM Construction Bulletin 1-28, meeting listed in minimum requirements FM 1-90.
1.10 QUALITY INSPECTION/OBSERVATION
A. Inspection by Manufacturer: Provide a final inspection of the roofing system by a Technical Representative employed by roofing system manufacturer.
1. Technical representative shall not perform any sales functions.
2. Contractor shall complete any necessary repairs required for issuance of warranty.
1.11 PRE-INSTALLATION CONFERENCE
A. Before start of roofing work, attend a conference to discuss the proper installation of materials. Attendees shall include all parties directly affecting work of this Section.
1.12 DELIVERY, STORAGE AND HANDLING
A. Deliver products in manufacturer's original containers dry, undamaged, seals and labels intact and legible.
B. Store all materials clear of ground and moisture with weather protective covering.
C. Keep all combustible materials away from ALL ignition sources.
1.13 ENVIRONMENTAL REQUIREMENTS
A. Install roofing membrane only when surfaces are clean, dry, smooth and free of snow or ice.
B. Do not apply roofing membrane during inclement weather or when ambient conditions will not allow proper application. Consult Manufacturers Technical Specifications on cold weather application.

**1.14 WARRANTY**
**A. Type/Term:**
**1. Provide 20-year Firestone Red Shield Warranty. Warranty shall include membrane, roof (and membrane accessories or membrane accessories, and metal edging and coping.**
**B. Coverage**
**1. Roofing System Warranty:**
**a. Limit of liability: No Dollar Limitation**
**b. Scope of coverage**
**Repair any leak in the TPO Roofing System caused by the ordinary wear and tear of the elements, manufacturing defect in materials, and the workmanship used to install these materials.**
**2. Insulation Warranty:**
**a. Limit of liability: No Dollar Limitation**
**2.02 MANUFACTURERS - MEMBRANE MATERIALS**
**A. Firestone mechanically attached single-ply membrane system: Reinforced ULTRAPLY TPO sheet roofing, roll width determined by roofing manufacturer and roofing contractor, securely attached to the roof deck with prefabricated Barbed Seam plates and heavy duty mechanical fasteners.**
**2.03 ULTRAPLY TPO SHEET ROOFING AND FLASHING MEMBRANE**
**A. Description: Reinforced, ULTRAPLY TPO synthetic single-ply membrane composed of Thermoplastic Polyolefin polymer, and Ethylene Propylene Rubber.**
**1. Membrane Type: .080 Reinforced TPO**

| *Testing* | Minimum Values | Typical values (SI Units) |
|---|---|---|
| Thickness, min, mm (in.) | | |
| Sheet-overall | 1.0 (0.039) | 0.080± 10% |
| Coating over scrim | 0.381 (0.015) | 0.018± 10% |
| Tensile strength, min, MPa (psi) | NA | |
| Breaking strength, min, kN (lbf) | 1.0 (225) | 300 |
| Elongation, ultimate, min, % | NA | |
| Elongation at break, min, % | 15A | 25A |
| Tensile set, max, % | NA | |
| Tear strength, min, kN/m (lbf/in.) | NA | |
| Tearing strength, min, N (lbf) | 245 (55) | 245 (55) |
| Brittleness point, max, °C (°F) | -30 (-22) | -60 (-51) |
| Ozone resistance, no cracks | Pass | Pass |
| Properties after heat aging: (retained values) | | |
| Tensile strength, % min | NA | |
| Breaking strength, % min | 90% | 90% |
| Elongation, ultimate, % min | NA | |
| Elongation at break, % min | 90%A | 90% |
| Tear strength ,% min | NA | |
| Tearing strength, % min | 90% | 90% |
| Weight Change (Mass), max % | ±4B | ±4B |
| Linear dimensional change, max, % | ±2 | -1.0 |
| Water absorption, max, mass % | ±4B | +1.0B |
| Factory seam strength, min, kN/m (lbf/in.) | 75% of Sheet strength | 75% of Sheet strength |
| Weather resistance: | | |
| Visual inspection | Pass | Pass |
| Tensile strength, % min | NA | |
| Breaking strength, % min | 90% | 90% |
| Elongation, Ultimate, % min | NA | |
| Elongation at break, min, % | 90%A | 90%A |
| PRFSE, min, % | N/A | |

B. Reference Standards

D 412 Test Methods for Vulcanized Rubber and Thermo-plastic Rubbers and Thermoplastic Elastomers--Tension
D 471 Test Method for Rubber Property--Effect of Liquids
D 573 Test Method for rubber--Deterioration in an Air Oven
D 624 Test Method for Tear Strength of Conventional Vulcanized Rubber and Thermoplastic Elastomers
D 751 Test Methods for Coated Fabrics
D 1149 Test Method for Rubber Deterioration--Surface Ozone Cracking in a Chamber
D 1204 Test Method for linear Dimensional Changes of Non-rigid thermoplastic Sheeting or Film at Elevated Temperature
D 1822 Test Method for Tensile-Impact Energy To Break Plastics and Electrical Insulating Materials
D 2137 Test Methods for Rubber Property--Brittleness Point of Flexible polymers and Coated Fabrics
D 5538 Practice for Thermoplastic Elastomers Terminology and Abbreviations
G 155 Practice for Operating Light Exposure Apparatus (Xenon-arc Type) With and Without Water for Exposure of non-metallic Materials
G 154 Practice for Operating Light and Water-Exposure Apparatus (Fluorescent UV Condensation Type) for Exposure of Nonmetallic Materials

2.04 ROOF SEPARATING COMPONENTS
A. Firestone Polyiso Rigid Foam Board Insulation (R=20 thickness 3.1")

A. Reference Standards:
1. FS HH-I-1972/Gen. 2.FS HH-I-1973/3. 3. ASTM C 209 - Water Absorption. 4. ASTM E 96-Water Vapor Transmission of Materials.
5. ASTM D 1621 - Compressive Strength. 6. ASTM D 1622 - Density 7. ASTM D 2126 - Dimensional Stability. 8. ASTM E 84 - Flame Spread.

**2.05 TPO SHEET ROOFING SYSTEM COMPONENTS**
**A. Roof Membrane**
**1. Description: .080mil TPO membrane**
**B. TPO unsupported Flashing**
**1. Description: Non-reinforced, TPO, ingle-ply flashing composed of Thermoplastic Polyolefin polymer, and Ethylene Propylene Rubber**
**a. Nominal Thickness: .080 mil**
**C. TPO Bonding Adhesive:**
**1. Description: Formulated for compatibility with the ULTRAPLY TPO membrane and a wide variety of substrate materials, including masonry, wood, insulation facings.**
2. Product:
a. TPO Water Based Bonding Adhesive.
D. Pourable Sealer:
1. Description: 2-Part urethane, 2-color reliable mixing.
E. Seam Plates:
1. Description: Steel with barbs and a Galvalume coating.
2. Reference Standard: Corrosion-resistant to meet FM-4470 criteria.
F. Termination Bar:
a. Description: 1.3" x 0.10" thick aluminum bar with integral caulk ledge.
G. Membrane Fasteners
1. Description: Heavy duty threaded fastener with 3-coat waterborne fluorocarbon polymer coating and drill point tip capable of penetrating 20 gauge steel. Fastener shall meet minimum thread size of .260" and 13 threads per inch. Length shall be sufficient to penetrate deck a minimum of 3/4" for steel and 1" for wood and concrete. Structural concrete decks must be pre-drilled with a 7/32" carbide drill bit to a depth 1/2" deeper than the fastener engagement.
2. Reference Standard:
SAE 1022, Heat Treated
3. Product:
a. Heavy Duty (HD) fasteners.
H. TPO Cut Edge Sealant
a. Polymeric sealant for use where exposed reinforcement is encountered.
I. TPO General Purpose Sealant
a. Polymeric one part general purpose sealant.
J. TPO Coated Metal
a. Galvanized Steel with Manufacturers bonded TPO Coating.
K. TPO Molded Flashing Accessories
a. Unreinforced TPO membrane Pre-Molded for a variety of flashing details (i.e.; Pipe Boots, Inside-Outside corners, etc.)
**2.06 METAL FLASHING**
**A. Edge Metal and/or Coping**
**1. Description: Provide prefabricated 24 gauge Steel with Kynar finish in manufacturers standard colors to be selected by specifier or 24 gauge galvanized as required and/or specified.**

**2. Product/Producer: Firestone UnaClad Metal**
2.07 MISCELLANEOUS
A. Roof Walkway Pads:
1. Description: Non-reinforced TPO Walkway, .130" x 30" x 50' with Patterned traffic bearing surface.
**NOTE: Walkway to be cut to fit around all mechanical units and at the point where access ladder terminates at roof edge. Walkway shall only be installed in these specific areas.**
B. TPO molded inside corners
C. TPO Molded outside corners
D. TPO Molded pipe boots
E. TPO T-Joint Covers

PART 3 INSTALLATION
3.01 EXAMINATION
A. Examine roof deck to determine that it is sufficiently rigid to support roofers and their mechanical equipment and that deflection will no strain or rupture roof components or deform deck.
B. Verify that surfaces and site conditions are ready to receive work. Correct defects in the substrate before commencing with roofing work.
C. Examine roof substrate to verify that it is properly sloped to drains.
D. Start work with sealants and adhesives at 60° - 80° F.
E. Fumes from adhesive solvents may be drawn into the building during installation through rooftop intakes. Appropriate measures must be taken to assure that fumes from adhesive solvents are not drawn into the building through air intakes.
F. For reroofing applications only: remove existing roof system components as specified.
G. The surface must be clean, dry, smooth, free of sharp edges, fins, loose or foreign materials, oil, grease and other materials that may damage the membrane, All roughened surfaces, which could cause damage, shall be properly repaired before proceeding.
H. All surface voids of the immediate substrate greater than 1/4" wide must be properly filled with an acceptable insulation or suitable fill material.
3.02 PROTECTION OF OTHER WORK
A. Protect metal, glass, plastic, and painted surfaces from adhesives and sealants.
B. Protect neighboring work, property, cars, and persons from spills and overspray from adhesives, sealants and coatings and from damage related to roofing work.
C. Protect finished areas of the roofing system from roofing related work traffic and traffic by other trade.
3.03 MATERIAL STORAGE AND HANDLING
A. Keep all adhesives, sealants, primers and cleaning materials away from all sources of ignition.
B. Consult container labels and material Safety Data Sheets (MSDS) for specific safety instructions.
C. Deliver materials to job site in their original containers as labeled by the manufacturer.
3.04 MEMBRANE PLACEMENT AND ATTACHMENT
A. Starting at the low point of the roof, place the membrane panels without stretching over the acceptable substrate. Position subsequent membrane sheets in the same manner, overlapping the ends of adjoining sheets a minimum of 3" and side laps a minimum of 6". Install panels to insure that laps shed water.
a. Where TPO Membrane has been cut to expose reinforcing membrane, TPO Cut Edge Sealant or TPO General Purpose Sealant must be used to encapsulate exposed edge.
C. Install each fastener so that it is properly engaged in the deck and not overdriven.
3.05 MEMBRANE ATTACHMENT AT PERIMETER
Mechanically Attached Perimeter:

A. Layout perimeter attachment in the pattern designated by the project designer, and to comply with Manufacturers minimum requirements.
B. Install the seam plates using Manufacturers Heavy Duty fasteners.
3.06 MEMBRANE LAP SPLICING
A. Lap splice areas that have been contaminated must be wiped down with a dry or damp (water only) clean cloth prior to heat welding and allow to completely dry.
B. All field and flashing splices on the horizontal surface shall be completed using an automatic heat welder that has been designed for hot air welding of thermoplastic Olefin membranes.
C. Hand held welders are only to be used on vertical welds or where an automatic welder is not practical or cannot be used.
D. Seams made with the automatic welder shall be a minimum of 1-1/2" wide. Seams made with hand welders shall be a minimum of 2" wide. Use 2" side silicone or silicone coated steel hand rollers to assure proper mating of surfaces a s hand heat welding proceeds.
E. Probe all completed welds using a slotted screwdriver or cotter pin puller type tool to verify seam integrity. Do not probe welds until they have had time to cool to ambient conditions. Any welds found to be insufficiently welded need to be repaired on a daily basis.
3.07 MEMBRANE SECUREMENT
A. Secure membrane at all locations where the membrane terminates or goes through an angle change greater than 1" in 12" except for round pipe penetrations less than 18" in diameter and square penetrations less than 4" square.
1. Mechanically fasten Seam Plates with Fasteners in accordance with Manufacturers Details.
2. Install TPO membrane as flashing.
3.08 FLASHING - PENETRATIONS
A. General:
1. If project is retrofit or Tear-Off remove all existing flashings (i.e., lead, asphalt, mastic, etc.)
2. Flash all penetrations passing through the membrane.
3. The flashing seal must be made directly to the penetration.
B. pipes, Round Supports, etc.
1. Flash with Pre-Molded TPO Pipe Flashings where practical
2. Flash using TPO unsupported Flashing membrane when Pre-Molded Flashing is not practical.
C. Structural Steel Tubing
1. Use a field fabricated pipe-flashing detail provided that the minimum corner radius is greater than1/4" and the longest side of the tube does not exceed 12". When the tube exceeds 12: use a standard curb detail.
D. Roof Drains
1. If project is Retrofit or Tear-Off remove all existing flashings, drain leads, roofing materials and cement from the existing drain in preparation for membrane Water Block Seal.
2. Provide a clean even finish on the mating surfaces between the clamping ring and the drain bowl.
3. Taper insulation around the drain to provide a smooth transition from the roof surface to the drain. Use pre-manufactured tapered insulation with facer or suitable bonding surface to achieve slope. Slope shall not exceed Manufacturers recommendations.
4. Position the TPO membrane, then cut a hole for the food drain to allow 1/2" - 3/4" of membrane extending inside the clamping ring past the drain bolts.
5. Make round holes in the TPO membrane to align with clamping bolts. Do not cut the membrane back to the bolt holes.
6. Place Water Block Seal on top of drain bowl where the clamping ring seats below membrane.
7. Install the roof drain clamping ring and clamping bolts. Tighten the clamping bolts to achieve constant compression.
E. Pipe Clusters and Unusual Shaped Penetrations
1. Fabricate penetration pockets to allow a minimum clearance of 1" between the penetration and all sides.
2. Secure penetration pockets per Manufacturers Details.
3. Fill penetration pockets with Pourable Sealer, so as to shed water.
F. Hot Pipes
1. Protect the TPO components from direct contact with steam or heat sources when the in-service temperature is in excess of 140°F. In all such cases flash to an intermediate insulated "cool" sleeve per Firestone details.
G. Flexible Penetrations
1. Provide a weathertight gooseneck set in Water Block Seal and secured to the deck.
2. Flash in accordance with Manufacturers Details.
H. Scuppers
1. Remove existing scupper and provide a new welded watertight scupper or clean the existing scupper for reuse.
2. Set welded watertight scupper in Water Block Seal and secure to the structure.
3. Flash in accordance with Manufacturers Details.
I. Expansion Joints
1. Install as shown on roof drawings in accordance with Manufacturers details.
3.09 FLASHING - WALLS, PARAPETS, MECHANICAL EQUIPMENT CURBS, SKYLIGHTS, etc.
A. General:
Using the longest pieces practical, flash all walls, parapets, curbs, etc., a minimum of 8" high per Manufacturers Details.
B. Evaluate Substrate:
Evaluate the substrate and overlay per Manufacturers specifications as necessary.
C. If project is Retrofit or Tear-Off remove all flashings.
D. Remove excessive asphalt to provide a smooth, sound surface for new flashings.
E. Apply TPO Bonding Adhesive at about the same time to both the membrane flashing and the surface to which it is being bonded so as to allow approximately the same drying time. Apply Bonding Adhesive by rolling the adhesive on to the mating surfaces evenly, avoiding globs or puddles.
F. Allow TPO Bonding Adhesive to flash off until tacky. Touch the Bonding Adhesive surface with a clean, dry finger to be certain that the adhesive does not stick or string. As you are touching the adhesive, pushing straight down to check for stringing, also push forward on the adhesive at an angle to ensure that the adhesive is ready throughout its thickness. If either motion exposes wet or stringy adhesive when the finger is lifted, then it is not ready for mating. Flash off time will vary depending on ambient air conditions.
G. Roll the flashing into the adhesive evenly and carefully so as to minimize wrinkles.
H. To ensure proper contact, compress the flashing to the substrate with a stiff push broom.
I. Complete the splice between membrane flashing and the main roof sheet by hot air welding. Provide lap splices in accordance with Manufacturers Details.
J. Provide termination directly to the vertical substrate as shown in Manufacturers Details.
K. Install TPO T-Joint covers at field and flashing splice intersections as required by Manufacturer.
L. Install intermediate flashing attachment as required by Manufacturers Specifications and Details.
3.10 FLASHING - GRAVEL STOPS OR ROOF EDGE METALS
A. Flash all gravel stops or roof edges using materials as outlined in Manufacturers Details.
3.11 TEMPORARY CLOSURE (NOT WARRANTED BY MANUFACTURER)
A. Temporary closures, which ensure that moisture does not damage any completed section of the new roofing system, are the responsibility of the roofing contractor. Completion of flashings, terminations, and temporary closures shall be completed as required to provide a watertight condition.
3.12 ROOF WALKWAYS
A. Walkways may consist of TPO Walkway material. Heat weld the perimeters of the walkway material to the TPO membrane per Manufacturers specifications.
3.13 SHEET METAL WORK
A. Field inspection and testing will be performed as required by the manufacturer
B. Correct identified defects or irregularities.
3.14 FIELD QUALITY CONTROL
A. Field inspection and testing will be performed as required by the manufacturer.
B. Correct identified defects or irregularities.
3.15 CLEAN-UP
A. Clean all contaminants from building and surrounding areas.
B. Remove trash, debris, equipment from project site and surrounding areas.
C. Repair or replace damaged building components or surrounding areas to the satisfaction of the building owner.

END OF SECTION

Drawing Name: P:\2013\201307800\560 Car Wash Construction Documents\Produced\A4.0_CW.dwg Last Modified: Jan 20, 2015 – 1:39pm Plotted on: Jan 20, 2015 – 1:39pm by amata

FOR BID ONLY

D2 SCALE – NOT USED

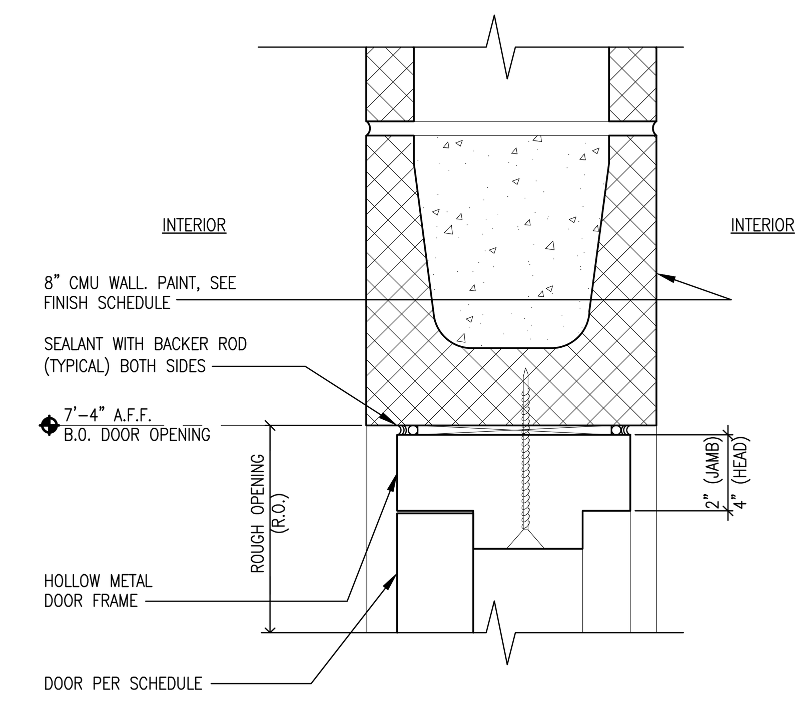


D3 SCALE 3"=1'-0" HEAD/JAMB DETAIL

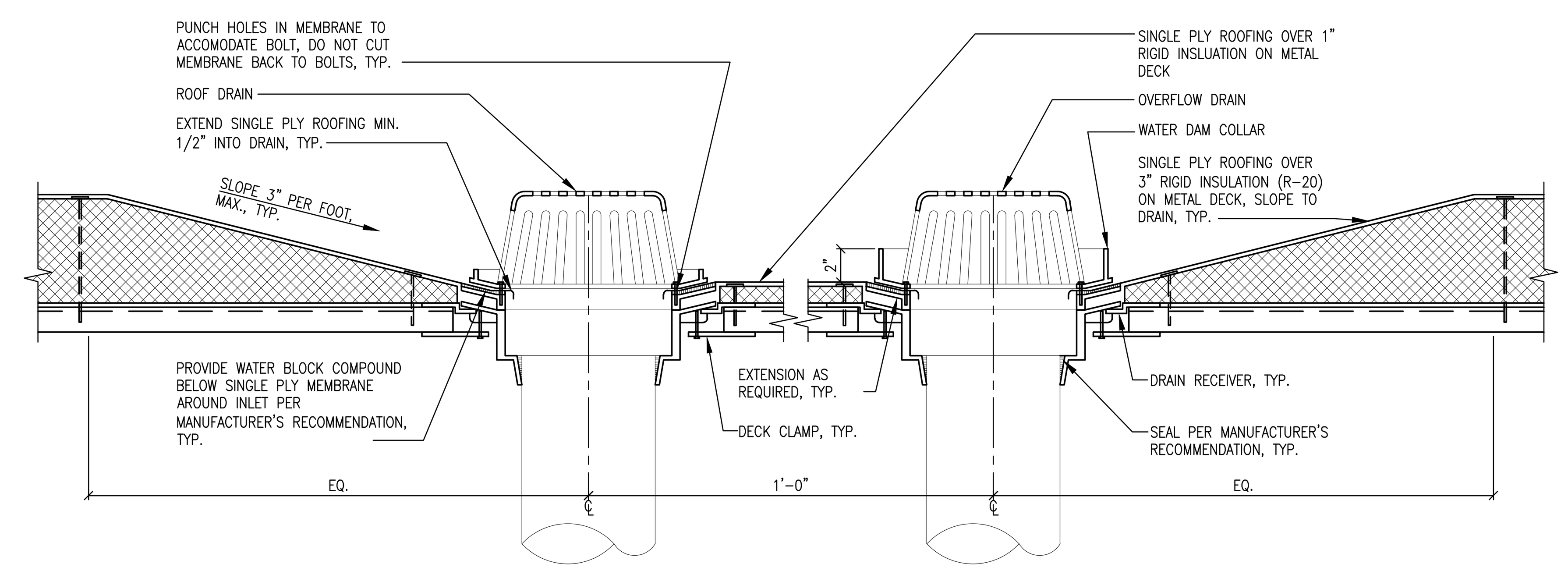


D4 SCALE 1 1/2"=1'-0" ROOF AND OVERFLOW DRAINS

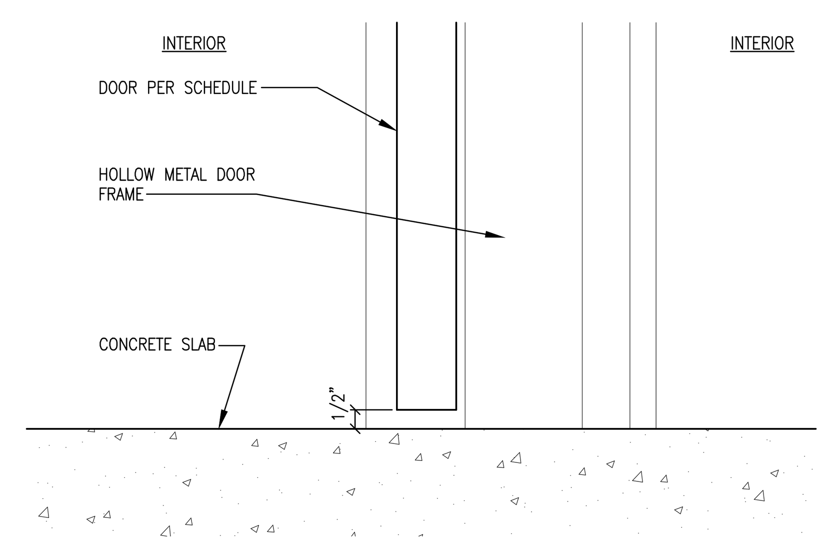


C3 SCALE 3"=1'-0" SILL DETAIL

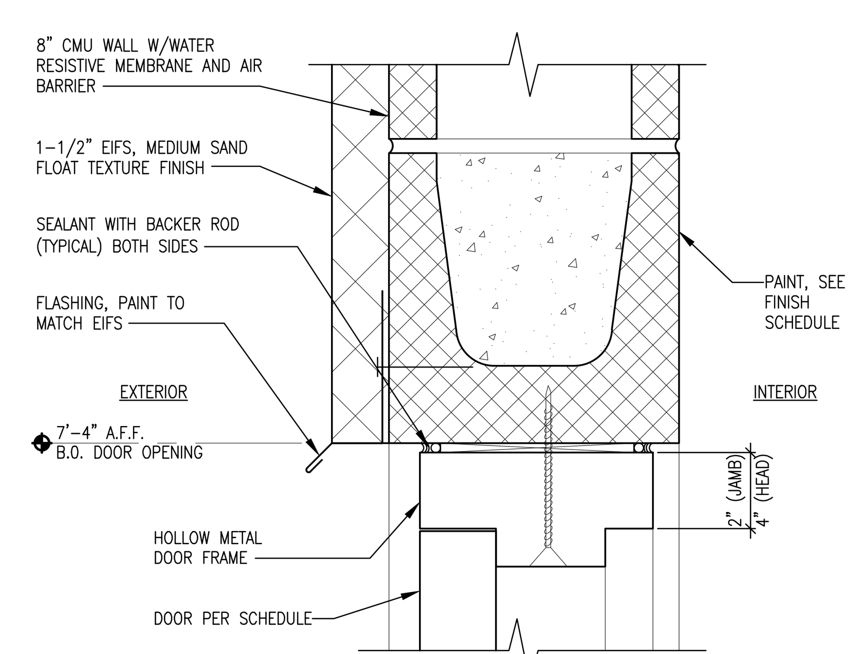


B3 SCALE 3"=1'-0" HEAD/JAMB DETAIL

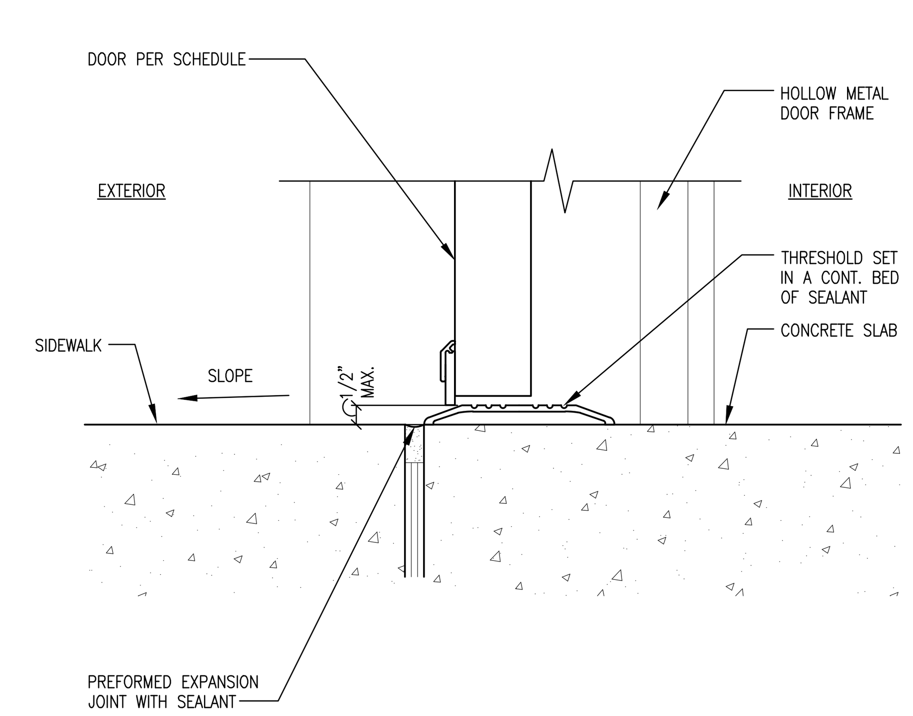


A3 SCALE 3"=1'-0" SILL DETAIL

## FINISH SCHEDULE

| ROOM NO. | ROOM NAME | FLOOR FINISH | BASE FINISH | WALL MATERIAL | WALL PAINT N | WALL PAINT E | WALL PAINT S | WALL PAINT W | CEILING MATERIAL | CEILING HEIGHT | NOTES |
|---|---|---|---|---|---|---|---|---|---|---|---|
| 100 | EQUIPMENT ROOM | 2.0 | 5.0 | 3.0 | 4.1 | 4.1 | 4.1 | 4.1 | 1.0, 4.1 | – | 1 |
| 101 | WASH BAY | 2.0 | 5.0 | 3.0 | 4.1 | 4.1 | 4.1 | 4.1 | 1.0, 4.1 | – | 1 |

### FINISH SCHEDULE NOTES
1. PAINT STRUCTURAL FRAMING MEMBERS AND UNDERSIDE OF DECK TO BE [4.0]

### WALL FINISH LEGEND
3.0 CMU

### CEILING FINISH LEGEND
1.0 EXPOSED STRUCTURE.

### PAINT LEGEND
4.0 PAINT, "WHITE ON WHITE" (GLIDDEN-ICI PAINTS 30GY 88/014).
4.1 PAINT, EPOXY WHITE

### FLOOR FINISH LEGEND
2.0 EXPOSED CONCRETE.

### BASE FINISH LEGEND
5.0 NONE.

## DOOR SCHEDULE

| MARK | ROOM NO. | DOOR SIZE WIDTH | DOOR SIZE HEIGHT | DOOR SIZE THICKNESS | DOOR TYPE | DOOR MATERIAL | DOOR FINISH | FRAME MATERIAL | FRAME FINISH | HDW. GROUP | DETAILS HEAD | DETAILS JAMB | DETAILS SILL | REMARKS |
|---|---|---|---|---|---|---|---|---|---|---|---|---|---|---|
| 1 | 100/EQUIPMENT RM. | 4–0" | 7'–0" | 1 3/4" | A | INSUL. H.M. | PAINT | H.M. | PAINT | A1–1 | B3/A4.0 | B3/A4.0 SIM. | A3/A4.0 | PAINT, SEE ELEVATIONS. (U–0.70) |
| 2 | 101/WASH BAY | 3'–0" | 7'–0" | 1 3/4" | B | H.M. | PAINT | H.M. | PAINT | B1–1 | D3/A4.0 | D3/A4.0 SIM. | C3/A4.0 | PAINT TO MATCH ADJACENT SURFACE |

## HARDWARE SCHEDULE

### GROUP A1–1 INSUL. H.M. DOOR @ EXTERIOR

| DOOR NO. | DOOR TYPE | |
|---|---|---|
| 1 | A | DESCRIPTION: 4'–0" X 7'–0" X 1 3/4" INSULATED HOLLOW METAL EXIT<br>HINGES: ROTON PIANO HINGE – MODEL 780–224 HD<br>HARDWARE: 'SCHLAGE' AL80PD SERIES W/ 626 FINISH (SATURN)<br>DOOR CLOSER: LCN 4024 X 18<br>THRESHOLD: 'PEMKO' 151–AX36 W/ VINYL SWEEP 307–AV<br>FINISH: SHOP PRIMED. PAINT PER FINISH SCHEDULE<br>MISCELLANEOUS: INSTALL KICK PLATE<br>WEATHERSTRIPPING: NGP 5050B |

### GROUP B1–1 INTERIOR H.M. DOOR

| DOOR NO. | DOOR TYPE | |
|---|---|---|
| 2 | B | DESCRIPTION: 3'–0" X 7'–0" X 1 3/4" HOLLOW METAL<br>HINGES: 1 1/2" – PAIR 4 1/2" X 4 1/2" BUTT HINGES<br>HARDWARE: 'SCHLAGE' AL40S SERIES W/ 626 FINISH (SATURN)<br>DOOR CLOSER: 'INTERNATIONAL' #64 ALUM FINISH<br>THRESHOLD: NONE<br>FINISH: SHOP PRIMED. PAINT PER FINISH SCHEDULE<br>MISCELLANEOUS: INSTALL KICK PLATE |

FOR SHEET NUMBER REFERENCES NOTED ON THIS DRAWING, REFER TO SHEET NUMBER WITH SUFFIX '–CW'.

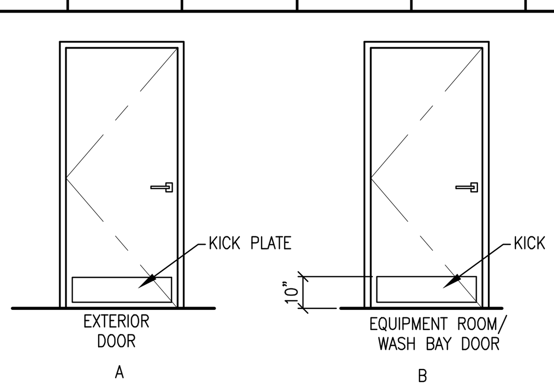


NOTES:

1) MAX. DOOR OPENING EFFORTS: 5 lbs. @ EXTERIOR, 5lbs. @ INTERIOR, & 15 lbs. @ FIRE DOORS.

2) ALL EXIT DOORS MUST BE OPENABLE FROM THE INSIDE W/O THE USE OF A KEY OR ANY SPECIAL KNOWLEDGE OR EFFORT.

3) DOOR CLOSING SPEED: COMPLY W/ ADA 404.2.8.1 5 SECONDS FROM 90° TO 12° FROM LATCH.

A4 SCALE 1/4"=1'-0" DOOR TYPES


GreenbergFarrow
1430 W. Peachtree St., Suite 200
Atlanta, GA 30309
t: 404 601 4000 f: 404 601 3980



COPYRIGHT NOTICE
This drawing is the property of the above referenced Professional and is not to be used for any purpose other than the specific project and site named herein, and cannot be reproduced in any manner without the express written permission from the Professional


ISSUE/REVISION RECORD

| DATE | DESCRIPTION |
|---|---|
| 01/19/15 | PERMIT SET |

PROFESSIONAL SEAL


PROFESSIONAL IN CHARGE
HUGHES THOMPSON
PROJECT MANAGER
OSCAR FLORES
QUALITY CONTROL
WARREN DRURY
DRAWN BY
ARMANDO MATA


PROJECT NAME
**CIRCLE K STORES, INC. CAR WASH**
**COLORADO SPRINGS COLORADO**
**E. FOUNTAIN BLVD & ACADEMY PARK LOOP**

CIRCLE K STORES INC.

PROJECT NUMBER
20130780

SHEET TITLE
**DOOR & FINISH SCHEDULES, AND ROOF SPECIFICATION**

SHEET NUMBER
**A4.0-CW**