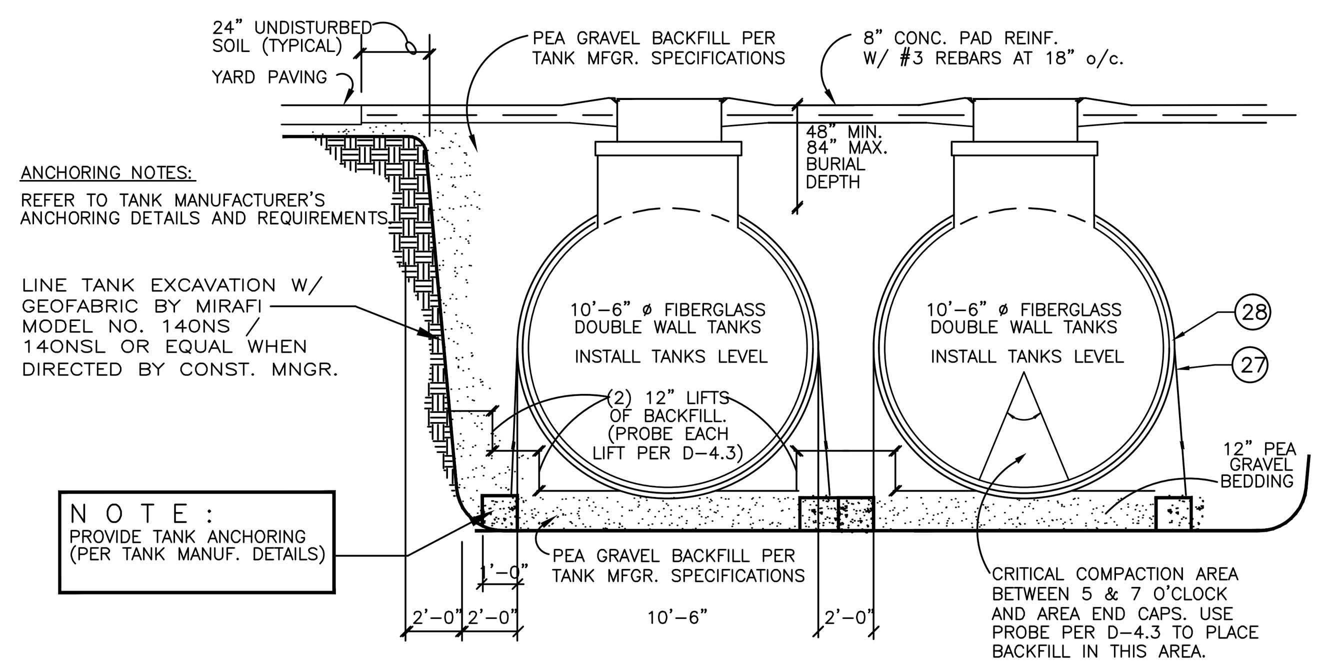

N.T.S.
1 UNDERGROUND TANK SECTION

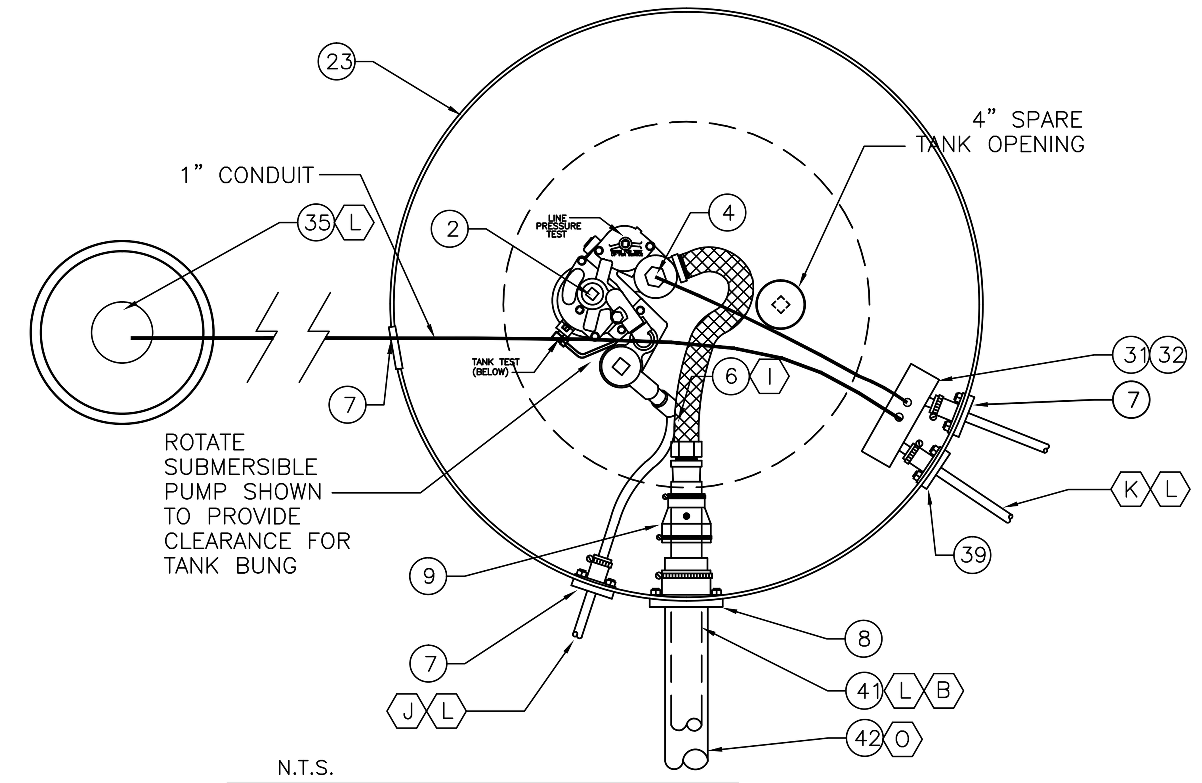

N.T.S.
2 CONTAINMENT SUMP PLAN VIEW

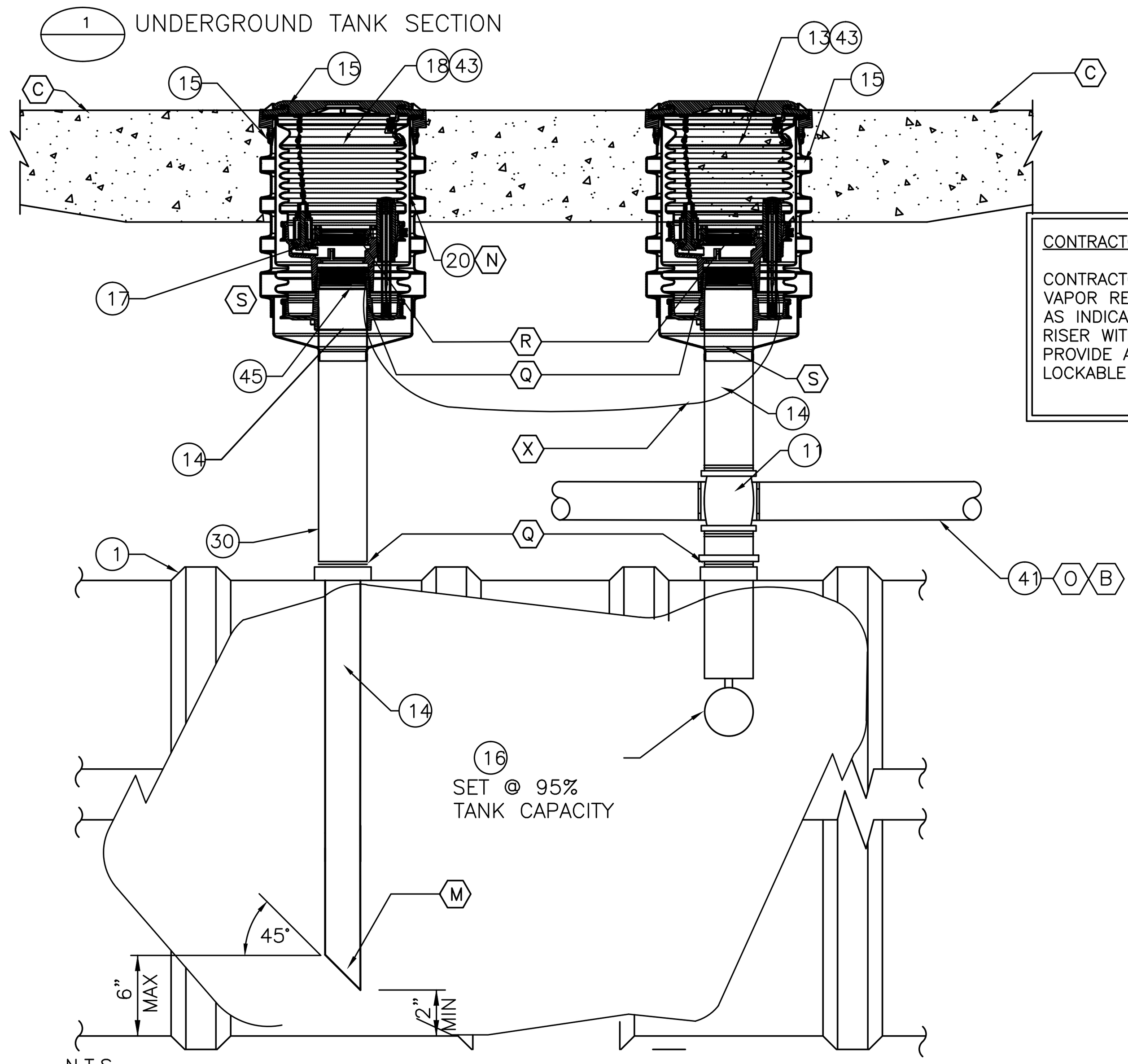

N.T.S.
3 STAGE I VAPOR RECOVERY & FILL DETAIL

CONTRACTOR NOTE: (AT DIESEL TANK ONLY)

CONTRACTOR SHALL PROVIDE AND INSTALL VAPOR RECOVERY RISER. SCOTCHRAP TAPE AS INDICATED FOR FUTURE USE. TERMINATE RISER WITH THREADED END AND CAP. PROVIDE AND INSTALL NEW MANHOLE WITH LOCKABLE COVER.

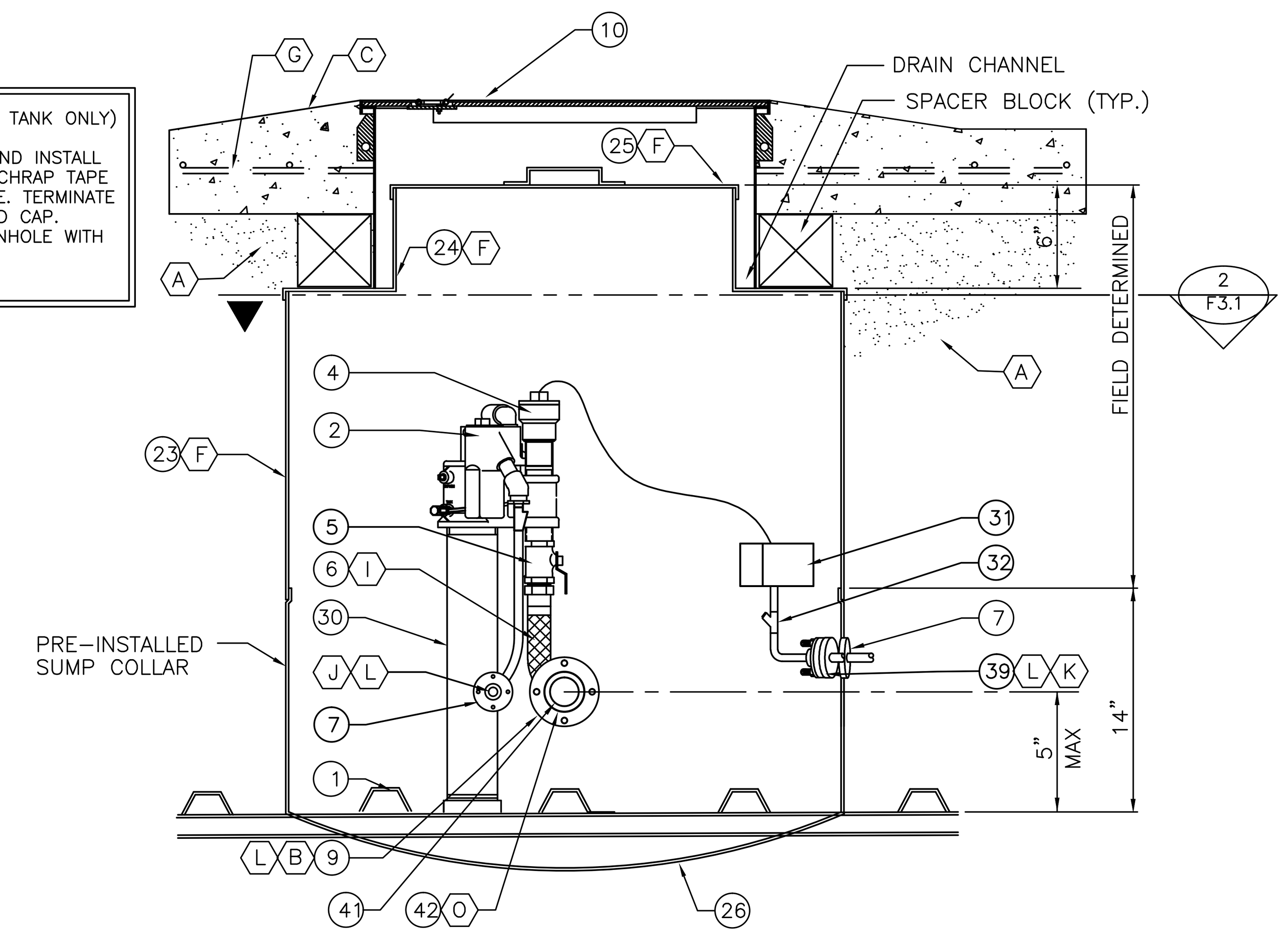

N.T.S.
4 CUTAWAY VIEW OF STP SUMP

NO	EQUIPMENT DESCRIPTION	MANUFACTURER	MODEL	SUPPLIED BY	NOTES
1	UNDERGROUND STORAGE TANK – DBL. WALLED, DRY ANNULAR, AND (2) SUMPS PER TANK	CONTAINMENT SOLUTIONS	DOUBLEWALL, 2 SUMP2 SIZE PER PLANS	OWNER	
2	2 HP SUBMERGED TURBINE PUMP–VARIABLE LENGTH	FE PETRO	2 HP FIXED (DIESEL) 2 HP VARIABLE (GASOLINE)	OWNER	
3	STP CONTROL BOX	FE PETRO	SMART PUMP CONTROLLER W/ DHI	OWNER	
4	PRESSURE LINE LEAK DETECTOR (PLLD)	VEEDER–ROOT	PLLD	OWNER	
5	2" BALL VALVE	AP	AP–94–A–2	OWNER	
6	FLEXING FLEX CONN. 2"X24" MxM SWIVEL END	FLEXING	FLX–224MMS	OWNER	
7	APT CONDUIT FITTING 1" 3/4"	APT	APT–FEB–075–D	OWNER	
8	APT 3" ENTRY BOOT	APT	APT–FEB–300–R	OWNER	
	13" MONITOR WELL W/CAP AND 13' SLOTTED PVC	–	E814–4–K	CONT.	
9	BLUE LINE 3"X2" TEST BOOTS W/TEST PORT, ENTRY BOOT	BLUE LINE	–	OWNER	
10	FLEXING 42" RAIN TIGHT COMPOSITE MANHOLE WITH CAM LOCKS	FLEXING	FLX–14URT–4210CL	OWNER	
11	OPW EXTRACTOR VALVE 4X4X3X2 NO CAGE	OPW	OPW–233–4432	OWNER	
12	ADAPTER, VAPOR, SWIVEL, BRONZE	OPW	61VSA–EVR	OWNER	*
13	ADAPTER, VAPOR, TOP SEAL CAP	OPW	1711T–7085–EVR	OWNER	*
14	EBW 4"X15" DROP TUBE – 2 PACK	EBW	EBW–78220415–2	OWNER	*
15	DOUBLE WALL SPILL CONTAINER	OPW	EDGE IC–3112D	OWNER	
16	EBW 3"X21" BALL FLOAT	EBW	E30830021	OWNER	–
17	OPW SWIVEL FILL ADAPTER	OPW	OPW–61SALP–EVR	OWNER	*
	APT 2" ENTRY BOOT	APT	APT–FEB–175–SC	OWNER	
18	ADAPTER, FILL, TOP SEAL CAP	OPW	634TT–7085–EVR	OWNER	*
19	15" MONITORING WELL WITH SLOTTED PVC (ONE EACH ON OPPOSITE CORNERS OF THE TANK HOLE)	–	E814–4–K	CONT.	–
20	FILL PIPE ID TAG, DIESEL FILL PIPE ID TAG, UNLEADED FILL PIPE ID TAG, PREMIUM GRADE VAPOR RECOVERY ID TAG	– – – –	US–FP1–125D US–FP1–125U US–FP1–125P US–FP1–22	OWNER OWNER OWNER OWNER	
21	3M SCOTCHRAP TAPE	3M	TYPE 51 20 MIL	CONT.	
22	16' TANK STICK (TO BE LEFT @ STORE)	BAGBY	BG1–16	OWNER	
23	42" DIA. FIBERGLASS CONTAINMENT SUMP	CONTAINMENT SOLUTIONS		OWNER	
24	42" DIA. FIBERGLASS SUMP CENTERED RISER–REDUCER TO 32"	CONTAINMENT SOLUTIONS		OWNER	
25	32" DIA. FIBERGLASS LID (26" WATERTIGHT OPTION)	CONTAINMENT SOLUTIONS	WATERTIGHT	OWNER	
26	42" DIA. ATTACHED FRP TANK COLLAR	CONTAINMENT SOLUTIONS	W\TANK	OWNER	
27	TURN BUCKLES & ANCHORS			CONT.	
28	HOLD DOWN STRAPS (10'–6" DIA. OR 8' DIA)	CONTAINMENT SOLUTIONS (10' – 6" DIA.)		OWNER	
29	NOT USED	TITEFLEX TELEFLEX	110165–32–0180 60–10477–0180	OWNER	
30	4" GALV. RISER– LENGTH AS REQUIRED			CONT.	
31	JUNCTION BOX		CH GUP215	CONT.	
32	SEAL OFF		CH EYD2	CONT.	
33	4" PVC CAP (ONE EACH ON OPPOSITE CORNERS OF THE TANK HOLE)	–	–	CONT.	
34	3" DIA PLUG FOR EXTRACTOR CROSS			CONT.	
35	INTERSTITIAL PROBE	VEEDER ROOT	794390–409	OWNER	
36	NOT USED	–	–	–	
37	TANK PROBE	VEEDER ROOT	847390–109	OWNER	
38	4" PIPE CAP, ATG	VEEDER ROOT	330020–282	OWNER	
39	APT CONDUIT FITTING 1" 3/4"	APT	APT–FEB–075–D	OWNER	
40	APT 2" ENTRY BOOT	APT	APT–FEB–175–SC	OWNER	
41	2" FIBERGLASS PIPE (FRP)	AO SMITH RED THREAD IIA OR AMERON	AMERON LCX	CONT.	
42	3" FIBERGLASS PIPE (FRP)	AO SMITH RED THREAD IIA OR AMERON	AMERON LCX	CONT.	
43	4" TIGHT FILL CAP, "DURATUFF" (DIESEL TANK ONLY)	OPW	OP634TT–7085	OWNER	
44	18" ROUND WATER TIGHT MANHOLE BOLT DOWN	–	U–98–1810	OWNER	
45	JACK SCREW ASSEMBLY	OPW	61JSK–4400–EVR	OWNER	*
46	NOT USED	–	–		
47	NOT USED	–		–	

EQUIPMENT NOTE: * EQUIPMENT IDENTIFIED WITH AN ASTERISK ARE PART OF OPW PACKAGE ORDER # PK2–521–EVR.

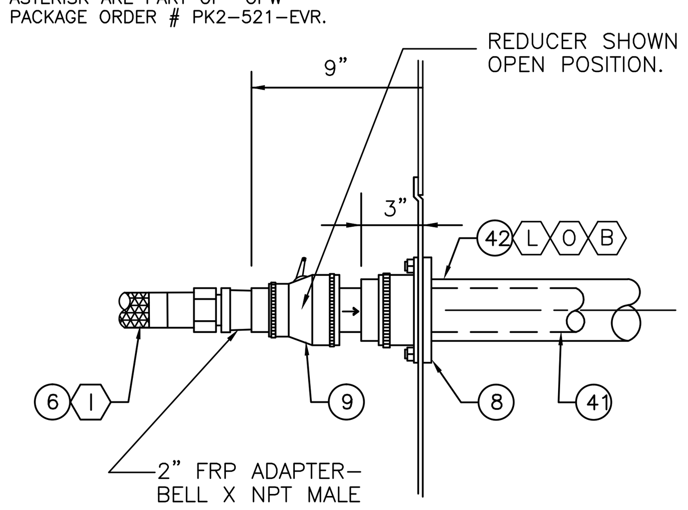

N.T.S.
5 PRODUCT PIPING / SUMP PENETRATION

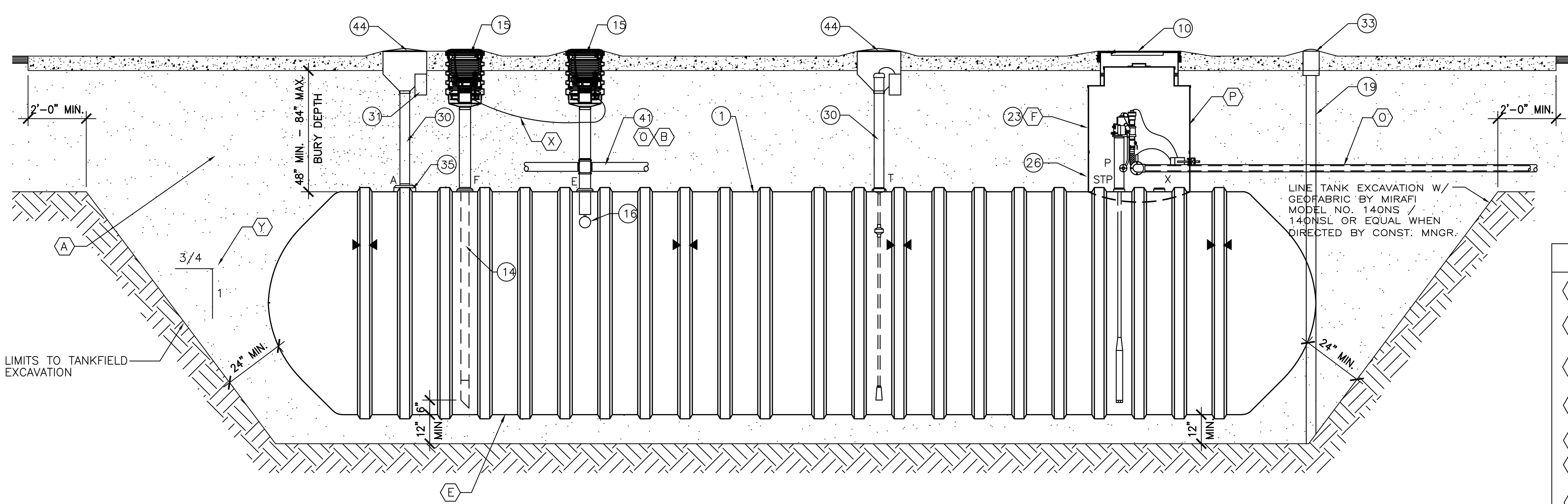

N.T.S.
6 TYPICAL 20K TANK INSTALLATION SIDE VIEW

FOR BID ONLY

NOTES

- (A) PEA GRAVEL BACKFILL. ALL OTHER MATERIAL MUST BE APPROVED BY TANK MANUFACTURER AND OWNER'S FIELD REPRESENTATIVE.
- (B) FIBERGLASS PIPE AND FITTINGS TO BE AMERON OR A.O. SMITH RED THREAD IIA. FITTINGS AND PIPING MAY NOT BE MIXED. USE ALCOHOL COMPATIBLE ADHESIVE.
- (C) SLOPE CONCRETE AWAY FROM ALL MANHOLES 1" RISE OVER 12" RUN. EXCEPT WHERE INDICATED.
- (D) DO NOT USE THREAD SEALANT ON THREADS COMMON TO CAGE AND BASE. WHEN INSTALLING CAGE INTO BASE, LUBRICATE THREADS WITH LIGHT COATING OF GREASE. DO NOT OVERTIGHTEN.
- (E) TANK BOTTOMS SHALL BE INSTALLED LEVEL.
- (F) INSTALL LID ONTO SUMP RISER AND SUMP RISER ONTO SUMP BASE USING ALL SUPPLIED GASKETS/ "O" RINGS, BOLTS, STEEL PLATES, ETC. PER SUMP MANUFACTURER'S INSTALLATION INSTRUCTIONS.
- (G) REINFORCE CONCRETE SLAB AROUND MANHOLE W/ 3–#4 REBAR 8' IN LENGTH 9"O.C.. PLACE REBAR 6" FROM SIDES OF BOX. MIN. 2" COVER.
- (H) 8" THICK 3000 PSI CONCRETE SLAB REINFORCED W/ #3 REBAR @ 18" O.C. TANK SLAB TO EXTEND 2' PAST TANK HOLE IN ALL DIRECTIONS.
- (I) MINIMUM BEND RADIUS 4".
- (J) 1" CONDUIT FROM EACH SUBMERSIBLE PUMP TO BUILDING. TERMINATE WITH SEAL–OFF PER NFPA SPECIFICATIONS.
- (K) 1" CONDUIT FOR CONTAINMENT SUMP SENSORS. LOOP CONDUIT BETWEEN CONTAINMENT SUMPS, THROUGH JUNCTION BOX. SEAL OFF 1" HOME RUN AT BOTH 1ST TANK AND BUILDING. DO NOT PIPE INTO WIRING TROUGH.
- (L) ALL PENETRATIONS MUST BE PERPENDICULAR TO CONTAINMENT SUMPS.

NOTES

- (M) CUT AND POSITION FILL TUBE WITH ANGLE AWAY FROM SUBMERSIBLE PUMP. OWNER'S ENGINEER SHALL VERIFY DROP TUBE HEIGHT.
- (N) INSTALL TANK ID. MARKERS IN THE SPILL CONTAINMENT MANHOLES USING WORM CLAMP AROUND FILL RISERS. INCLUDE OXYGENATED FUEL DATE TAGS WHERE APPLICABLE. SECURE IN PLACE.
- (O) PIPING SHALL BE LAID AND CONTINUOUSLY SUPPORTED ON A 6" COMPACTED BEDDING OF PEA GRAVEL. NO PIPING SHALL BE SUPPORTED BY BLOCKS, PLANKS, OR OTHER DEBRIS. MAINTAIN 7" MINIMUM COVER BETWEEN SLAB BOTTOM AND TOP OF FRP PIPE/FITTINGS. PIPING STANDARD FALL TO BE 1/4" PER FOOT. VAPOR LINE FALL TO BE VERIFIED BY TOSCO CONSTRUCTION MANAGER AFTER PIPING IS LAID ON GRAVEL BEDDING.
- (P) INTERIOR OF FIBERGLASS CONTAINMENT SUMP TO BE CLEAR OF PEA GRAVEL, TRASH AND ANY LIQUID.
- (Q) THOROUGHLY HAND CLEAN WITH WIRE BRUSH THE G.I. RISER SURFACE WITHIN 3" OF EXISTING TANK FITTING, ALL METALLIC COMPONENTS ABOVE TANK AND LOWER 1" OF SPILL CONTAINER. APPLY EPOXY PRIMER TO THESE AREAS. WRAP WITH 3M TAPE 20 MIL THICK.
- (R) 4"ø G.I. NIPPLE, TIGHT FILL ADAPTER (OR STAGE I VR DRY BREAK) AND LOCKING CAP. MAINTAIN 1 1/2" TO 2" BETWEEN CAP AND OVERFILL CONTAINER COVER. USE STABILIZER BARS SUPPLIED WITH OVERFILL CONTAINER TO ESTABLISH CORRECT FINISHED ELEVATION.
- (S) THE TORQUE RECOMMENDATION FOR TIGHTENING THE EMCO SPILL CONTAINERS TO THE RISER PIPES IS 250FT. LBS. MAXIMUM.
- (T) 5 1/2" BELOW THE MANHOLE RIM ELEVATION.
- (U) STAGE 1 VAPOR RECOVERY ADAPTOR FINISHED HEIGHT TO BE 3 1/2" TO 4 1/2" BELOW THE MANHOLE RIM ELEVATION.
- (V) "T&B" MODEL 3902 OR "O.Z./GEDNEY" MODEL G–100G 1/2"–1" HEAVY DUTY GROUNDING CLAMP OR OWNER APPROVED EQUAL.
- (W) #5 REINFORCING STEEL BAR, MINIMUM 8' LONG PLACED HORIZONTALLY IN NATIVE SOIL. BAR IS TO BE AT 30" MINIMUM BELOW CONCRETE SLAB.
- (X) #8 BRAIDED OR SOLID COPPER GROUNDING CONDUCTOR ROUTED IN SERIES BETWEEN BOTH SPILL CONTAINERS. CONNECT TO SPILL CONTAINERS AT GROUNDING STUDS PROVIDED. SECURELY CRIMP TO CONDUCTOR WITH "HYTOOL" NO. MR4C OR MY29. SPLICES ARE NOT PERMITTED BETWEEN GROUNDING STUDS AND/OR GROUNDING ROD.
- (Y) SLOPE PER SOILS REPORT OR TANK MANUFACTURER INSTALLATION INSTRUCTIONS
- (Z) COAXIAL PIPE MAY BE USED IN PLACE OF THE 2" X 3" CONFIGURATION WITH APPROVAL OF THE TOSCO CONSTRUCTION MANAGER. ONLY CLAMSHELL TYPE FITTINGS MAY BE USED WITH COAXIAL PIPE.

GreenbergFarrow
1430 W. Peachtree St., Suite 200
Atlanta, GA 30309
t: 404 601 4000 f: 404 601 3980

COPYRIGHT NOTICE
This drawing is the property of the above referenced Professional and is not to be used for any purpose other than the specific project and site named herein, and cannot be reproduced in any manner without the express written permission from the Professional

ISSUE/REVISION RECORD

DATE	DESCRIPTION
02/13/15	PERMIT SET

PROFESSIONAL SEAL

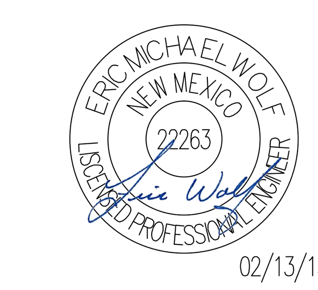

02/13/15

PROFESSIONAL IN CHARGE
ERIC WOLF
PROJECT MANAGER
ERIC WOLF
QUALITY CONTROL
ERIC WOLF
DRAWN BY
ERIC WOLF

PROJECT NAME
CIRCLE K STORES, INC.

ALBUQUERQUE
NEW MEXICO

4400 COORS BLVD. SW
ALBUQUERQUE, NM 87121

CIRCLE K STORES INC.

PROJECT NUMBER
20130791

SHEET TITLE
FUEL PIPING DETAILS

SHEET NUMBER
F3.1

CIRCLE K SOUTHWEST PROTOTYPE 4480 – 08/13/2013

Drawing Name: \\greenbergfarrow\Projects\2013\20130791\500 Construction Documents– CStore Fuel Can\Produced\Fuel–Gas Plans\20130791 0–F3.1.dwg Last Modified: Feb 13, 2015 – 2:07pm Plotted on: Feb 13, 2015 – 2:09pm by ewolf